Assembly Guide

PALM Assembly Guide (for Mini PCI-e card)

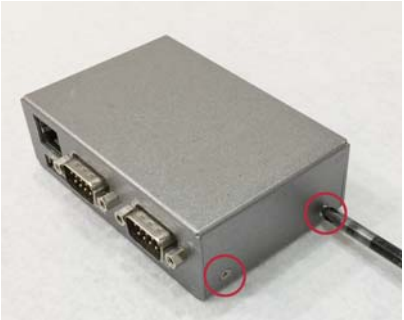

(Fig.1)

1. Remove 4 pcs M2*4 flat head screws from right and left side of system; remove 4 pcs hex screws on the COM port, then remove the top cover. (Fig.1)

(Fig.2)

2. Remove the fixed screws from Mini PCIe socket. (Fig.2)

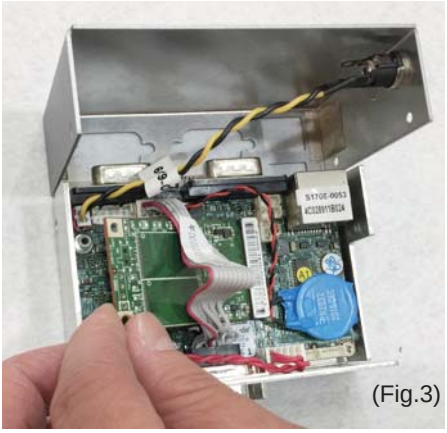

(Fig.3)

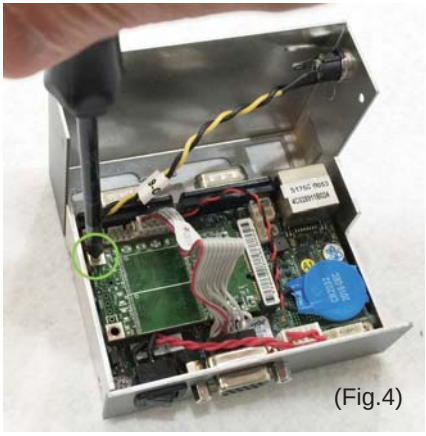

(Fig.4)

3. Insert the Mini PCIe card into the slot at a 45 degree angle. (Fig.3)

4. Press down the Mini PCIe card and screw the fixed screw on motherboard. (Fig.4)

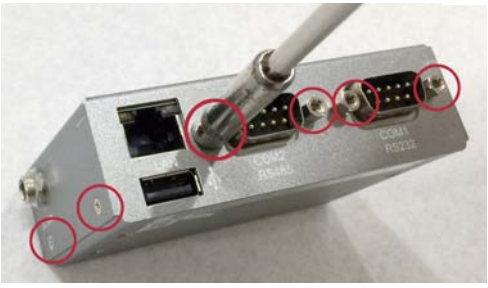

5. Install the top cover, screw the system via 4 pcs M2*4 flat head screws & 4 pcs COM port hex screws .(Fig.5)

PALM Exploded Drawing

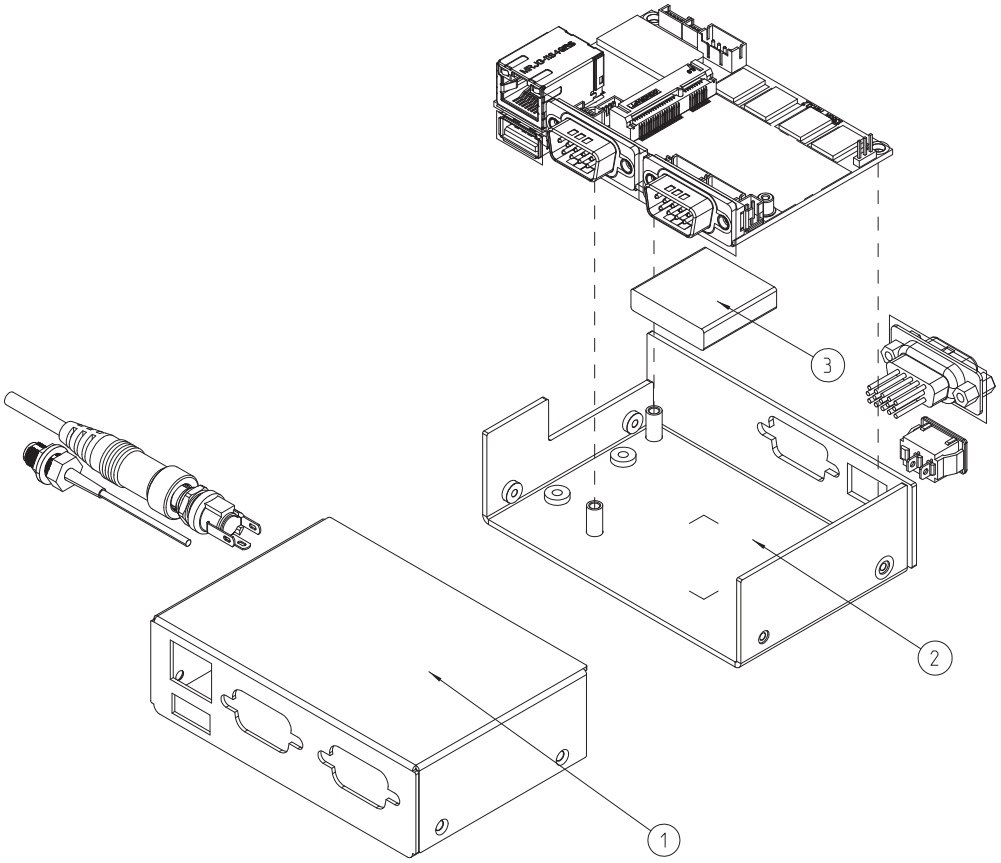

Dimension: 28(H) x 92.4(W) x 61.1(D) mm

1. PALM, TOP COVER, LF, AL=1MM, Iron-Gray, DC Jack, COM1 / COM2
2. PALM, Bottom Cover, LF, AL=1.5MM, Iron-Gray, VGA + SW
3. PALM, Heat Sink, CPU, LF, AL (25.4*25.4*6.35mm) + S8 (0.2T), Material

PALM Exploded Drawing

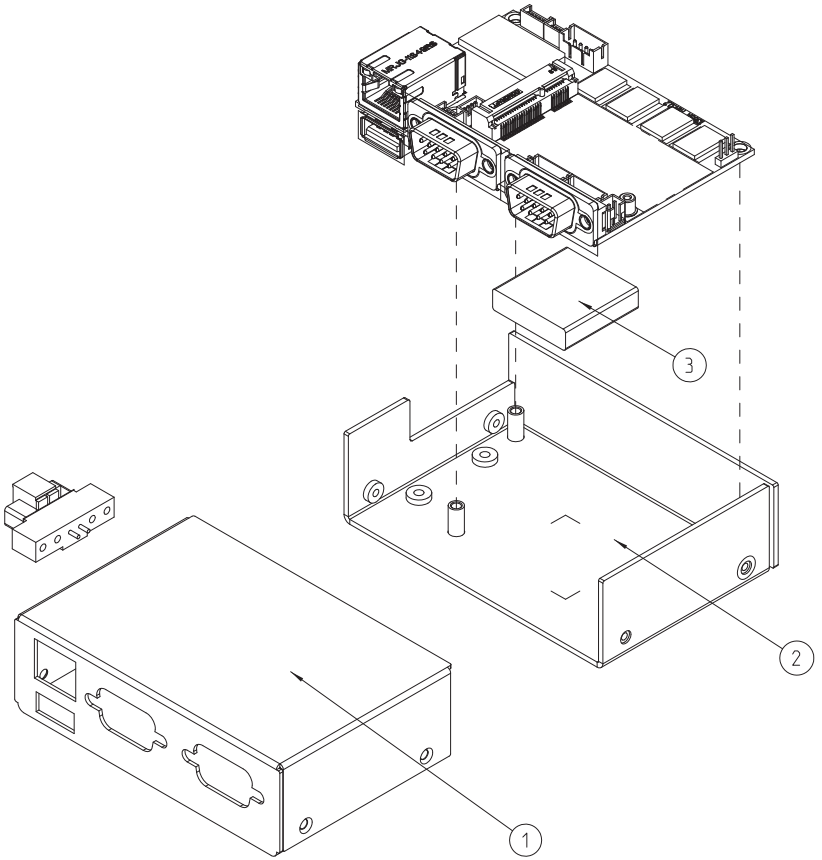

Dimension: 28(H) x 92.4(W) x 61.1(D) mm

1. PALM, TOP COVER, AL=1MM, Iron-Gray, TB-2P, COM1 / COM2
2. PALM, Bottom Cover, LF, AL=1.5MM, Iron-Gray
3. PALM, Heat Sink, CPU, LF, AL (25.4*25.4*6.35mm) + S8 (0.2T), Material