TTL-EXPANDER REV:A1

PCB SN:?

L=4, 95 x 32 mm

PAGE	TITLE
P01	Index
P02	Connectors & Others
P03	TTL

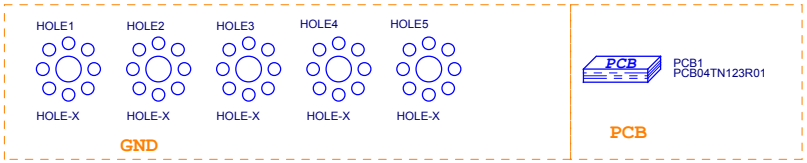

RoHS compliant

TechNexion		
Title: INDEX		
Size: Custom	Document Number: TTL_EXPANDER	Rev: A1
Date: Tuesday, May 31, 2016	Sheet 1 of 4	

Connectors

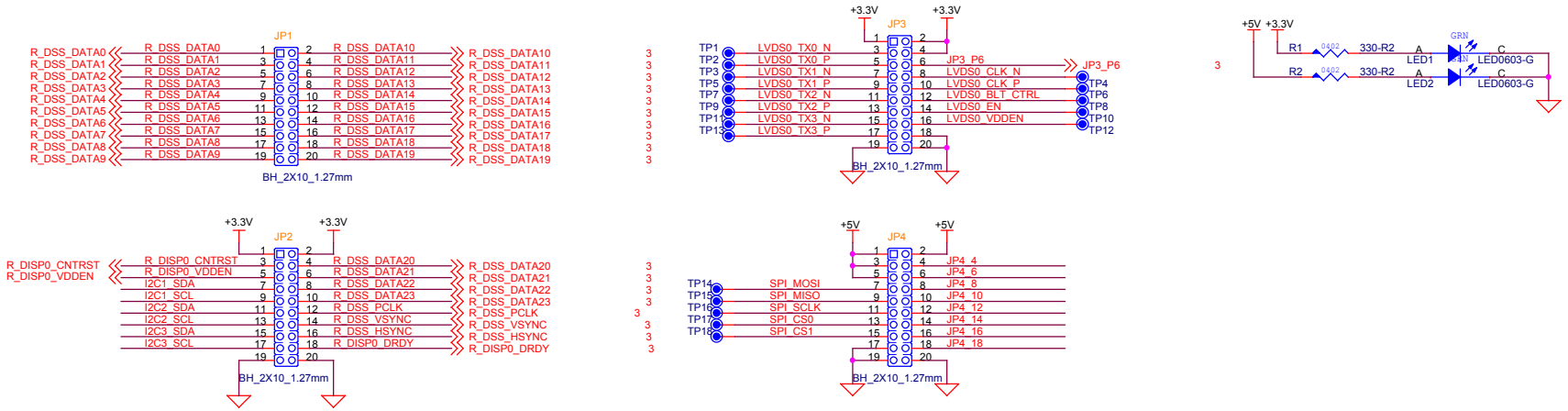

Touch

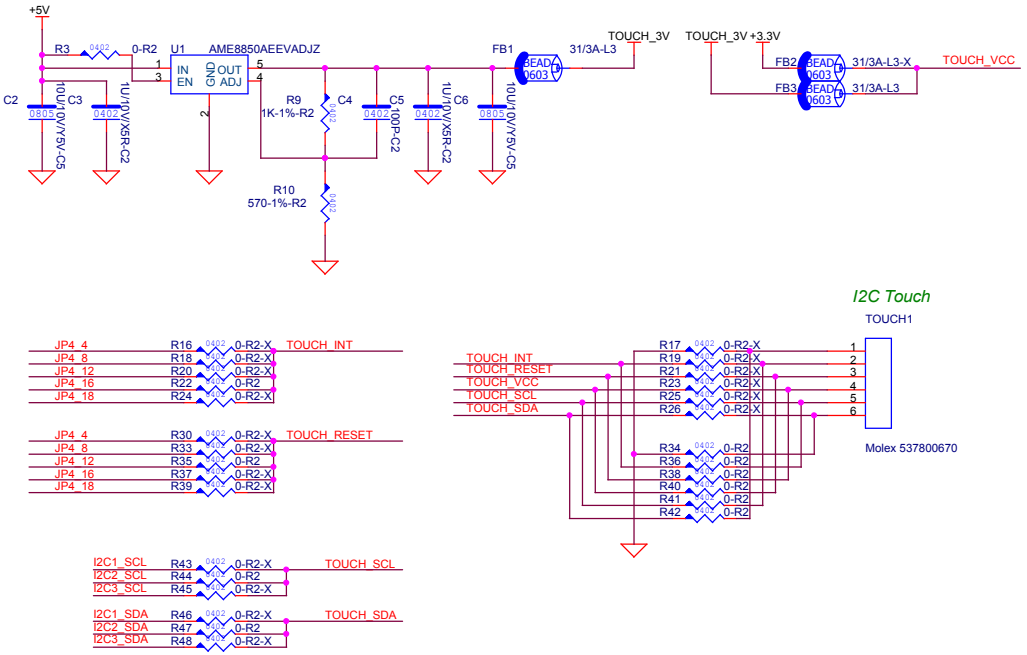

Buttons

Low Active for default.

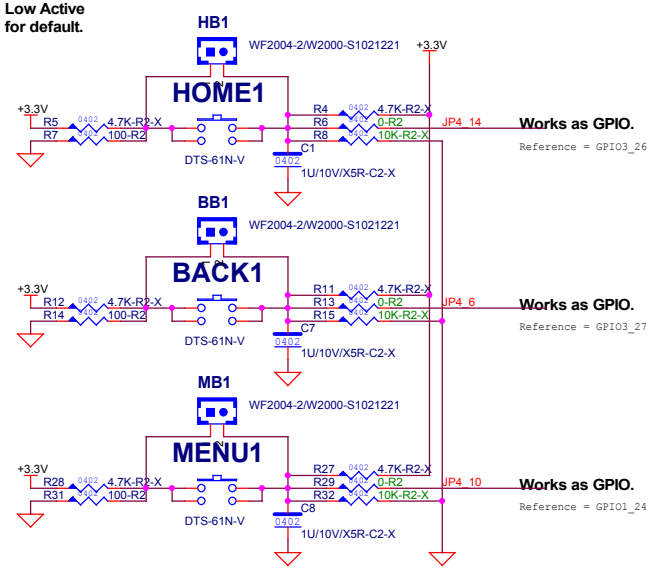

TechNexion		
Title	Connectors & Others	
Size Custom	Document Number TTL_EXPANDER	Rev A1
Date: Tuesday, May 31, 2016	Sheet 2 of 4	

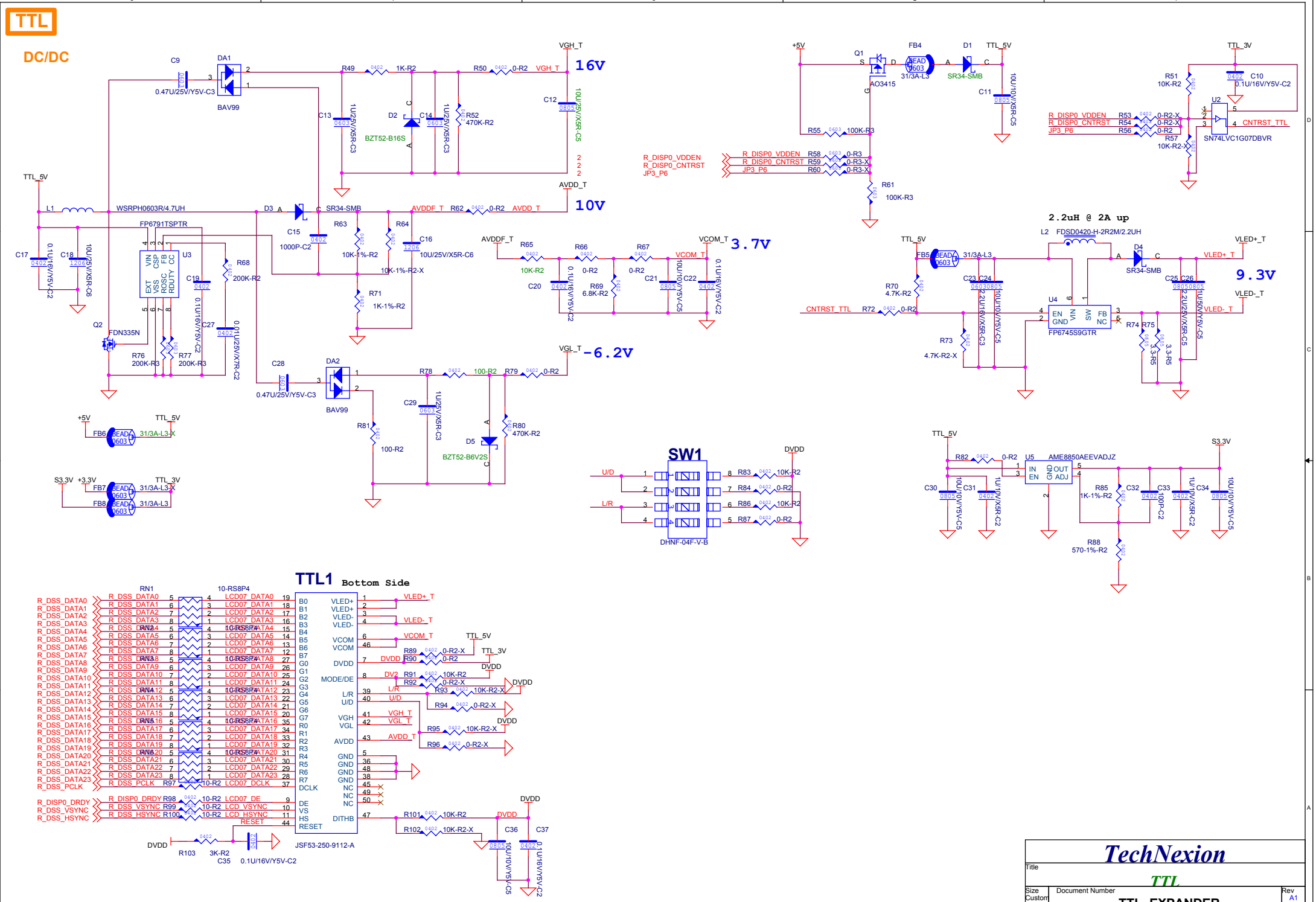
TTL
DC/DC
16V
10V
3.7V
-6.2V
9.3V
2.2uH @ 2A up
FP6791TSPTR
FP6745S9GTR
AME8850AEEVADJZ
SW1
TTL1 Bottom Side
JSF53-250-9112-A
DHNF-04F-V-B
TechNexion
TTL
Title
Size Custom
Document Number
TTL_EXPANDER
Rev A1
Date: Tuesday, May 31, 2016
Sheet 3 of 4

History

2016.05.20

modify list:

delete

R24 R37

add

R22 R35

volume change

R7 R14 R31 R78 chage to 100 ohm 0402 5%

D2 change to BZT52-B16S

D5 change to BZT52-B6V2S

C12 change to 10U/25V/X5R-C5

TechNexion		
Title: History		
Size: A	Document Number: TTL_EXPANDER	Rev: A1
Date: Tuesday, May 31, 2016	Sheet 4 of 4	