G3G120-BB03-02

EC centrifugal fan with housing (small flange)

forward curved, single inlet

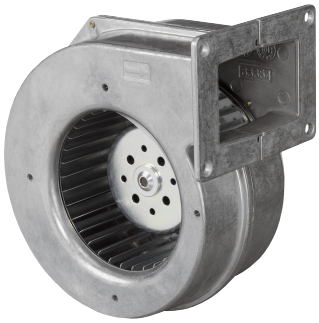

ebm-papst Mulfingen GmbH & Co. KG
Bachmühle 2
74673 Mulfingen
Phone: +49 7938 81-0
Fax: +49 7938 81-110
www.ebmpapst.com
info1@de.ebmpapst.com

Nominal data

Type	**G3G120-BB03-02**	
Motor	**M3G055-BD**	
Nominal voltage	[VAC]	230
Frequency	[Hz]	50/60
Type of data definition		rfa
Speed	[min^{-1}]	2200
Power input	[W]	41
Current draw	[A]	0.3
Max. ambient temperature	[°C]	60
Air flow	[m^3/h]	240
Back pressure	[Pa]	0
Sound pressure level	[dB(A)]	60.2

ml = max. load · me = max. efficiency · rfa = running at free air · cs = customer specs · cu = customer unit
Subject to alterations

EC centrifugal fan with housing (small flange)

forward curved, single inlet

Technical features

Leackage current	<= 3,5 mA
General description	Integrated electronics
Size	120 mm
Operation mode	Continuous operation (S1)
Mounting position	Mounting position: Any; condensate discharge holes: none
Direction of rotation	Clockwise, seen on rotor
Insulation class	"B"
Cable exit	Variable
Bearing-motor	Ball bearing
Mass	1.8 kg
Material of electronics housing	Rotor: Galvanized
Material of impeller	Hot-dip galvanized sheet steel
Motor protection	Locked-rotor protection
Type of protection	IP 44
Protection class	I
Technical features	Control input 0-10 VDC / PWM, output 10 VDC max. 1.1 mA, tach output, locked rotor protection
Approval	GOST

ebm-papst Mulfingen GmbH & Co. KG · Bachmühle 2 · 74673 Mulfingen · Phone: +49 7938 81-0 · Fax: +49 7938 81-110 · www.ebmpapst.com · info1@de.ebmpapst.com

EC centrifugal fan with housing (small flange)

forward curved, single inlet

Product drawing

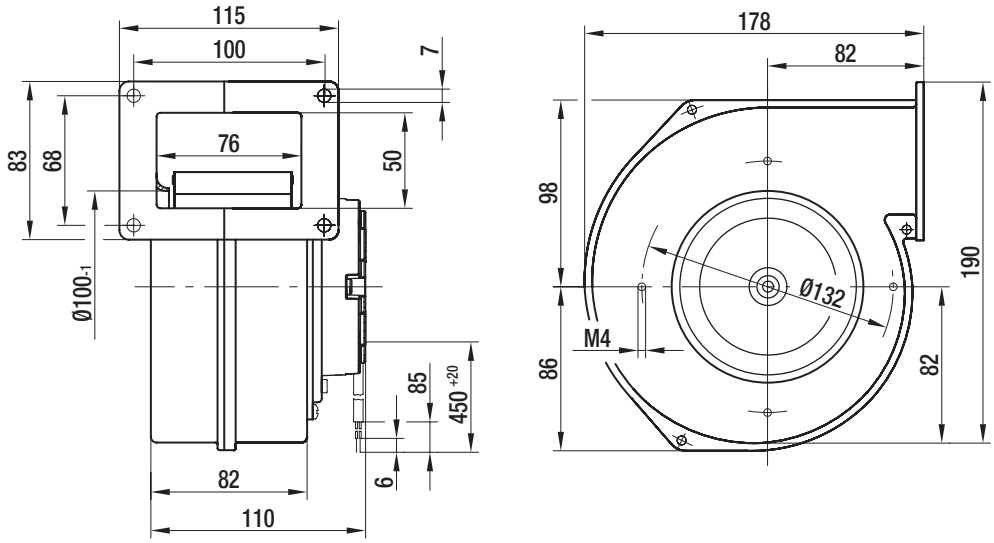

ebm-papst Mulfingen GmbH & Co. KG · Bachmühle 2 · 74673 Mulfingen · Phone: +49 7938 81-0 · Fax: +49 7938 81-110 · www.ebmpapst.com · info1@de.ebmpapst.com

EC centrifugal fan with housing (small flange)

forward curved, single inlet

Connection screen

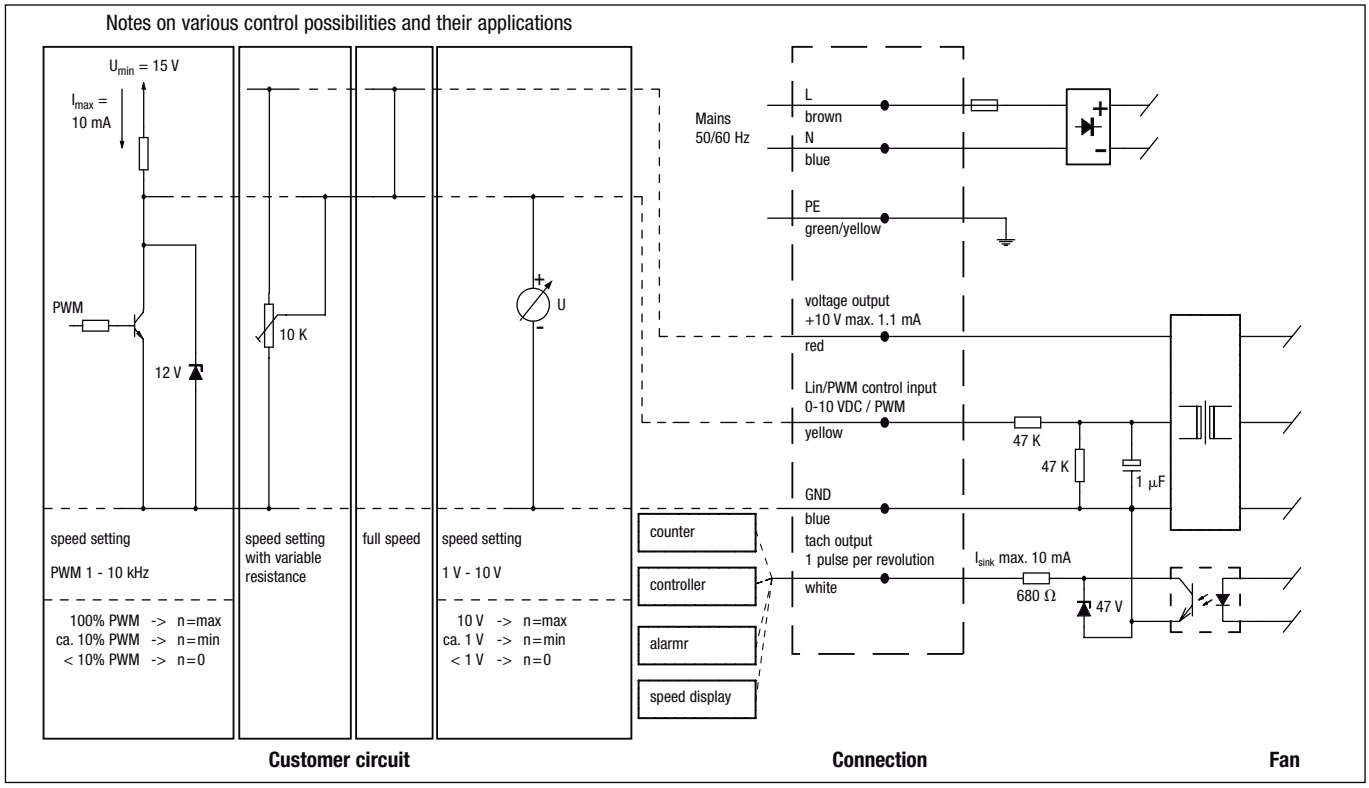

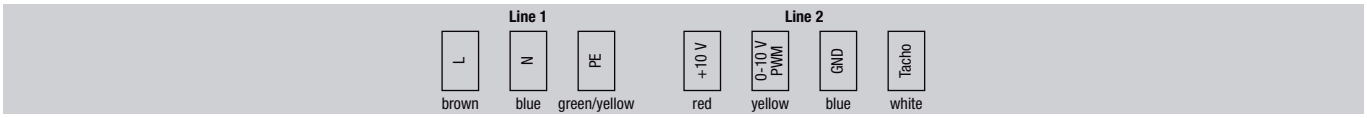

Line	Signal	Colour	Assignment / function
1	L	brown	Mains 50/60 Hz, phase
	N	blue	Mains 50/60 Hz, neutral
	PE	green/yellow	Protective earth

Line	Signal	Colour	Assignment / function
2	+10 V	red	Voltage output +10 V max. 1.1 mA
	0-10 V / PWM	yellow	Control input
	GND	blue	GND
	Tacho	white	Tach output: pulses per revolution

ebm-papst Mulfingen GmbH & Co. KG · Bachmühle 2 · 74673 Mulfingen · Phone: +49 7938 81-0 · Fax: +49 7938 81-110 · www.ebmpapst.com · info1@de.ebmpapst.com

EC centrifugal fan with housing (small flange)

forward curved, single inlet

Charts: Air flow

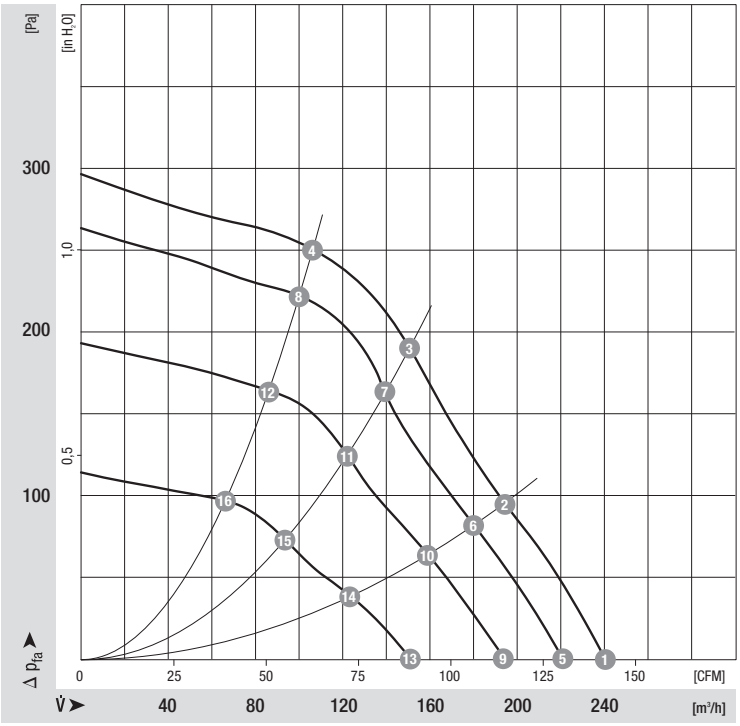

	n	P_1	I	η_{TL}
	[min^{-1}]	[W]	[A]	[%]
1	2200	41	0.30	
2	2320	34	0.25	51
3	2440	28	0.20	55
4	2600	20	0.15	49
5	2060	34	0.25	
6	2190	29	0.20	50
7	2295	24	0.20	54
8	2445	18	0.15	52
9	1830	24	0.20	
10	1920	20	0.15	50
11	2010	17	0.15	54
12	2115	13	0.10	52
13	1430	13	0.10	
14	1500	12	0.10	50
15	1580	10	0.10	54
16	1640	8	0.10	52

ebm-papst Mulfingen GmbH & Co. KG · Bachmühle 2 · 74673 Mulfingen · Phone: +49 7938 81-0 · Fax: +49 7938 81-110 · www.ebmpapst.com · info1@de.ebmpapst.com