MG1xx-7,5-P

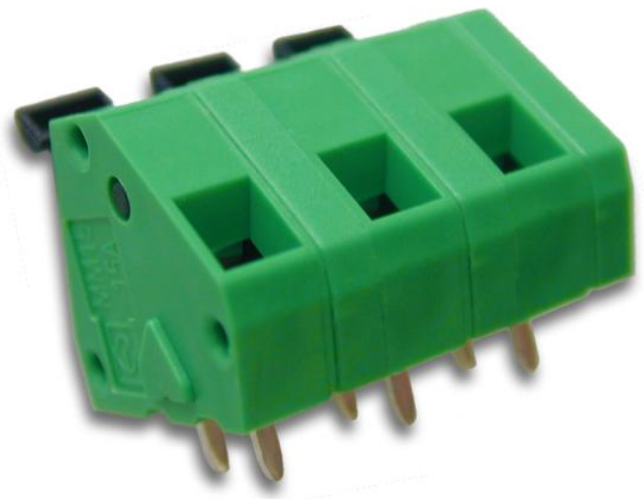

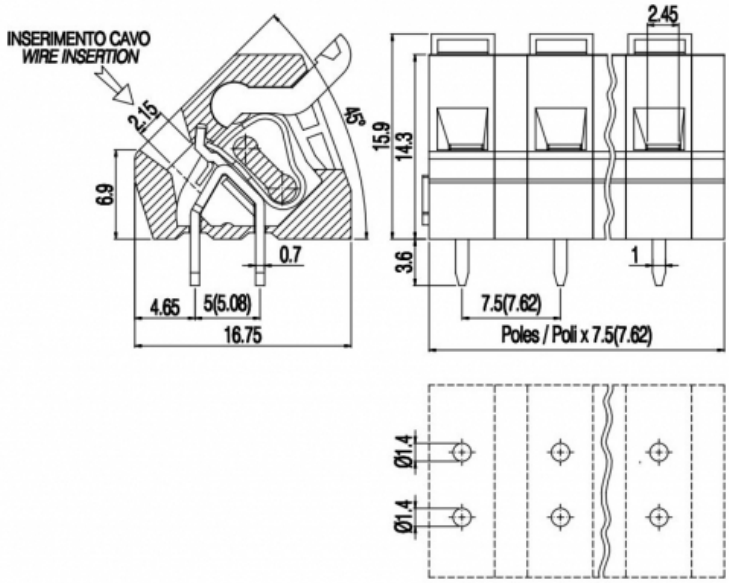

Screwless terminal block - 45° angled - with button - Modular version - Pitch 7,5mm - 1 pole

GENERAL INFORMATION

pitch:	7,5 mm
housing height:	14,30 mm
housing depth:	16.75 mm
dimensional class:	slow
wire section:	2.5 mm² / 14 AWG
clamp opening size:	2.45 × 2.45 mm
wire stripping:	max 9 mm
operating temperature:	-40°C ÷ +130°C

ELECTRICAL CHARACTERISTICS

current:	24A
voltage:	450V
test voltage:	2 kVrms/60s

MECHANICAL CHARACTERISTICS

spring releasing:	0.6 x 3.5mm
-	-

APPROVALS DATA

	CSV	VDE	cULus
	-	-	UL 1059
current:	-	-	17A factory / 17A field
voltage:	-	-	300V
wire section:	-	-	12÷30AWG
torque:	-	-	-
FILE:	-	-	E178356

MATERIALS

housing:	PA - UL 94 V0
screw:	n/a
clamp/spring:	
terminal:	Tin-plated copper alloy

AVAILABLE COLOURS

GN (STD) GY BK BL RD YL OG

other colours: upon request

Copyright ©2020 - euroclamp - http://www.euroclamp.it

poles	P/N	pcs/pack	W [Kg]*	W [Kg]*
02	MG102-7,5-P	N/A	N/A	N/A
..	MG1..-7,5-P	N/A	N/A	N/A

Copyright ©2020 - euroclamp - http://www.euroclamp.it