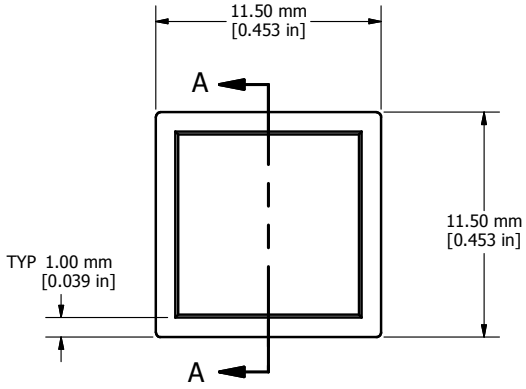

TOP VIEW

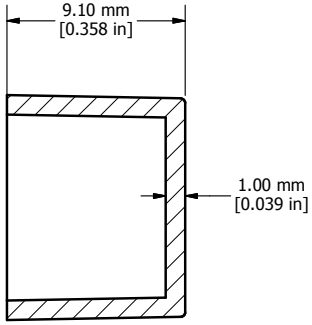

SECTION A-A

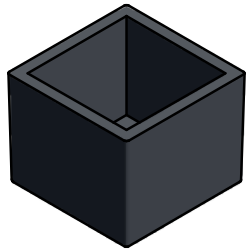

ISOMETRIC VIEW

1596B109	
Finish - Black (Smooth)	
Material - ABS Plastic	
Quantity	
1596B109	1 Box
1596B109-10	10 Boxes
1596B109-BULK	Bulk Packed

HAMMOND MANUFACTURING™

1596B109

www.hammondmfg.com