THIS DRAWING IS UNPUBLISHED. RELEASED FOR PUBLICATION 2011
© COPYRIGHT 2011 ALL RIGHTS RESERVED.

LOC	DIST
F	00

REVISIONS

P	LTR	DESCRIPTION	DATE	DWN	APVD
	C	ADDED REF. 1801179-9	03MAR2009	FJ	XR
	D	ADDED NUMBER ASSY LINE ON THE PART	21NOV2011	FJ	XR
	E	DRAWING REVISION	07NOV2013	FJ	XR

REF TE / TE NO.	INDICE DE REVISION / REVISION NUMBER	COULEUR / COLOR	TOLERANCE POUR DETROMPAGE: ±0.05 / KEYING TOLERANCE
1801179-1	D	NOIR / BLACK	100 — 5.65
1801179-2	D	BLEU / BLUE	110 — 3.75
1801179-3	D	GRIS / GREY	120 — 1.85
1801179-4	D	JAUNE / YELLOW	130 — 0.15
1801179-5	D	VERT / GREEN	140 — 1.95
1801179-6	D	MARRON / BROWN	150 — 3.85
1801179-7	D	BLANC / WHITE	160 — 1.15
1801179-8	D	ROUGE / RED	170 — 1.15
1801179-9	D	ORANGE / ORANGE	

NOTES/NOTES:

1- 1801179-1 REPRESENTE (COD. NOIR) / *AS SHOWN (COD. BLACK)*

2 REPERE ALVEOLES / *CAVITY MARKING*

3 LOGO TE / *TE LOGO*

4 DATE D'ASSEMBLAGE / *ASSEMBLY DATE*

5 CODE DU LIEU D'ASSEMBLAGE / *ASSEMBLY LOCATION DATE*

E = EUROPE / *EUROPE*

C = CHINE / *CHINA*

M = MERCOSUR / *MERCOSUR*

D 6 NUMERO DE LA MACHINE D'ASSEMBLAGE / NUMBER ASSEMBLY LINE

7 REF TE DE L'ASSEMBLAGE (RACINE) / *TE ASSEMBLY NO (RACINE)*

8 REF TE DE L'ASSEMBLAGE (SUFFIXE) / *TE ASSEMBLY NO (SUFFIX)*

9 INDICE DE REVISION PRODUIT / *PRODUCT REVISION NUMBER*

10- PIECES A UTILISER AVEC VOIR TABLEAU "COMPOSANTS ASSOCIES" / *MATED WITH : SEE TABLE "ASSOCIATED PARTS"*

11 FORME OPTIONNELLE / *OPTIONAL SHAPE*

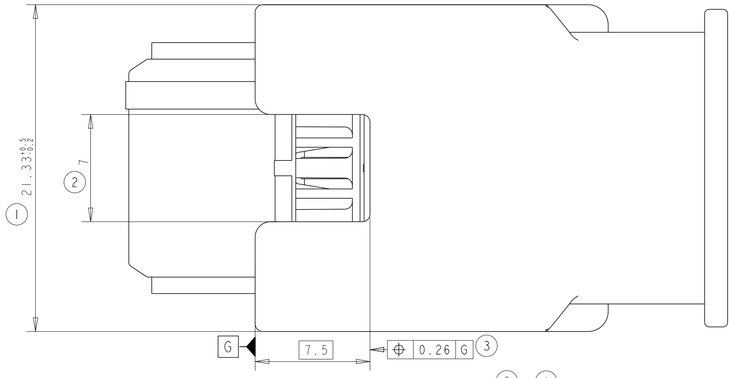

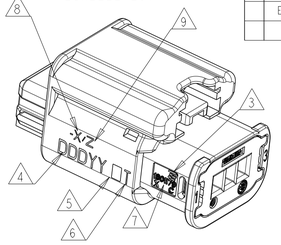

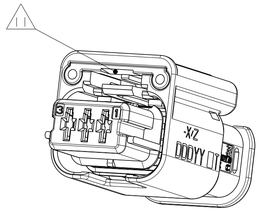

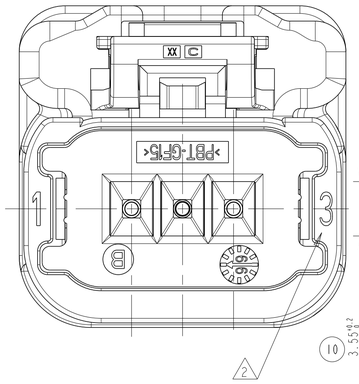

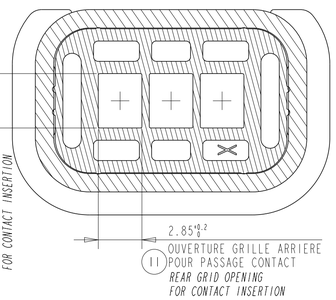

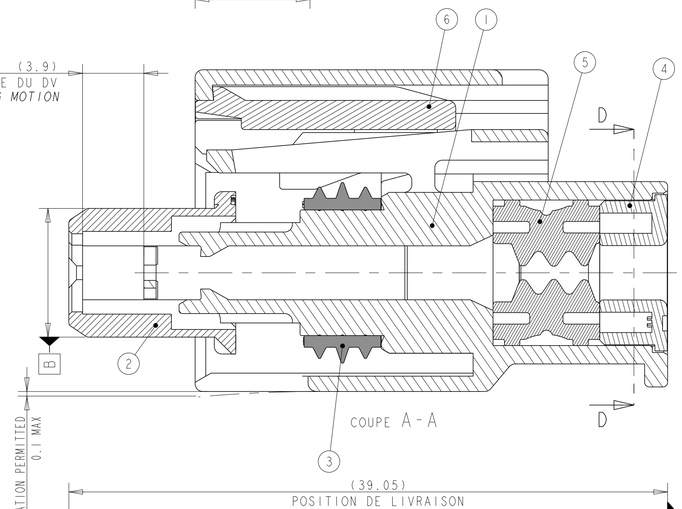

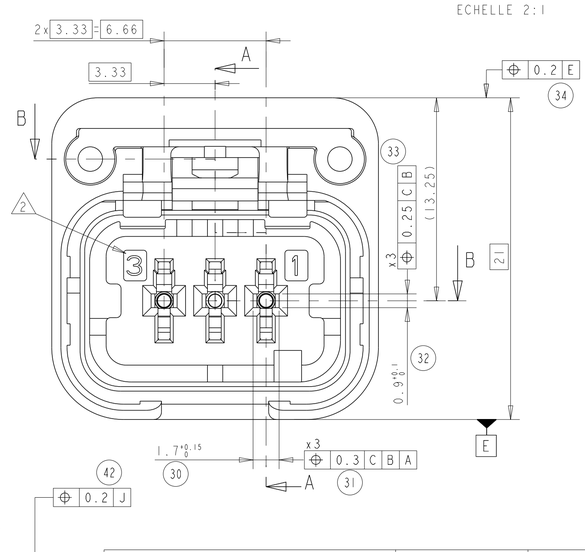

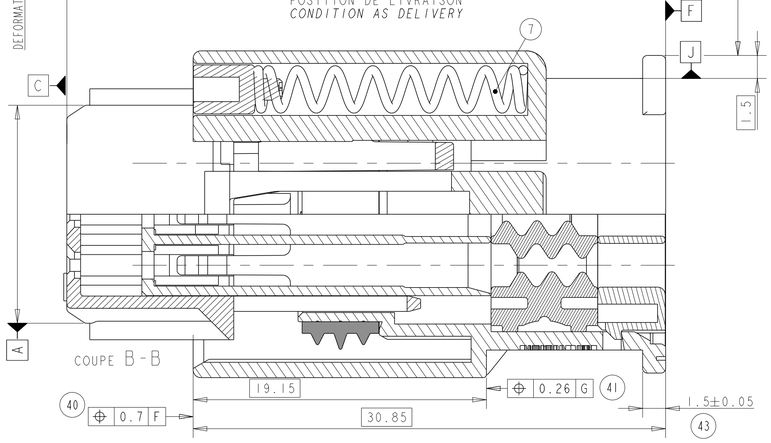

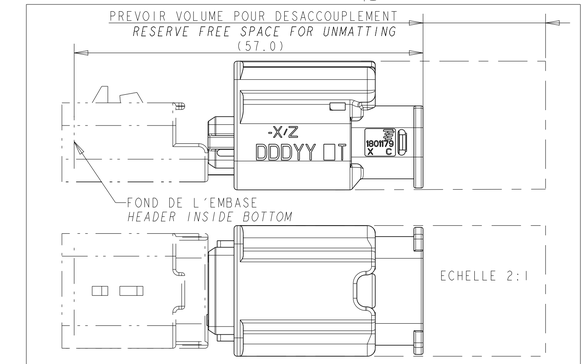

VOLUME A LAISSER POUR ACCOUPLEMENT / DESACCOUPLEMENT
FREE SPACE FOR MATTING / UNMATTING

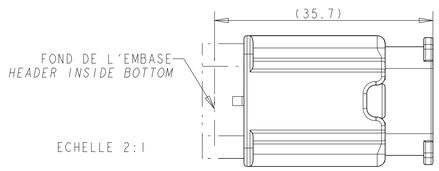

VOLUME MONTE SUR EMBASE
LAYOUT AS MATED ON HEADER

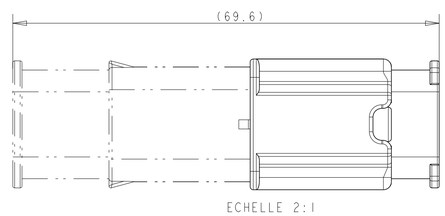

VOLUME MONTE SUR PORTE-LANGUETTES
LAYOUT AS MATED ON TAB CONNECTOR

CAPOT FIXE 3 VOIES - SORTIE GAUCHE/DROITE / *FIXED COVER 3 WAYS - LEFT/RIGHT EXIT*		POUR GAINE ANNELEE DE 6mm / *FOR CORRUGATED TUBE OF 6mm*	1801467-1
		POUR GAINE ANNELEE DE 4.5mm / *FOR CORRUGATED TUBE OF 4.5mm*	1-1801467-1
CAPOT FIXE 3 VOIES - SORTIE HAUT/BAS / *FIXED COVER 3 WAYS - UP/DOWN EXIT*		POUR GAINE ANNELEE DE 6mm / *FOR CORRUGATED TUBE OF 6mm*	1801467-2
		POUR GAINE ANNELEE DE 4.5mm / *FOR CORRUGATED TUBE OF 4.5mm*	1-1801467-2
CAPOT FIXE 3 VOIES - SORTIE AXIALE / *FIXED COVER 3 WAYS - EXIT IN LINE*		POUR GAINE ANNELEE DE 6mm / *FOR CORRUGATED TUBE OF 6mm*	1801168-5
		POUR GAINE ANNELEE DE 4.5mm / *FOR CORRUGATED TUBE OF 4.5mm*	1-1801168-5
CAPOT ROTATIF 90 DEG. 3 VOIES / *ROTATIVE COVER 90 DEG. 3 WAYS*	CAPOT (*) / *COVER*	POUR GAINE ANNELEE DE 6mm / *FOR CORRUGATED TUBE OF 6mm*	1801468-1
		POUR GAINE ANNELEE DE 4.5mm / *FOR CORRUGATED TUBE OF 4.5mm*	1-1801468-1
	SUPPORT (*) / *ADAPTER*		1801359-1
CLIP 1.5 SENSOR II DORE Section 1.4 à 2mm² / *RECEPTACLE 1.5 SENSOR II GOLD PLATED Section 1.4 to 2mm²*			1670328-1
CLIP 1.5 SENSOR II DORE Section 0.75 à 1mm² / *RECEPTACLE 1.5 SENSOR II GOLD PLATED Section 0.75 to 1mm²*			1670326-1
C CLIP 1.5 SENSOR II DORE Section 0.35 à 0.5mm² / *RECEPTACLE 1.5 SENSOR II GOLD PLATED Section 0.35 to 0.5mm²*			1564724-1
OBTURATEUR "MINI-ETANCHE" / *'MINI-ETANCHE' PLUGGING PIN*			
PORTE-LANGUETTES 3 VOIES HP / *3 WAYS TAB CONNECTOR HP*			1801177-X
DESCRIPTION / *TITLE*			**TE NO / *REF TE***
COMPOSANTS ASSOCIES / *ASSOCIATED PARTS*			

(*): POUR LE CAPOT ROTATIF, PRENDRE: SUPPORT + CAPOT
FOR THE ROTATIVE COVER, TAKE: ADAPTER + COVER

SECTION CABLE ADMISSIBLE PAR CONTACT
ACCEPTABLE CABLE SECTIONS PER CONTACT

C La section des câbles utilisés doit être comprise entre 0,35 et 2mm² avec un diamètre d'Isolant compris entre 1,40mm mini et 2,80mm Maxi
The cross-section of the cables used must be between 0,35 and 2mm² (with Insulator diameter included between 1,40mm mini and 2,80mm Maxi)

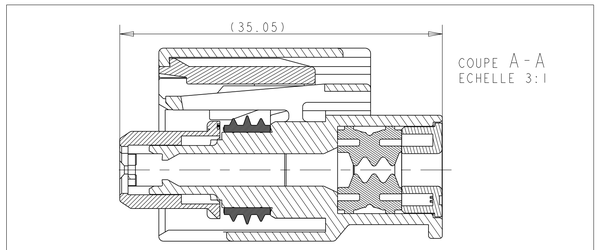

PORTE-CLIPS AVEC DV ACTIONNE
RECEPTACLE CONNECTOR WITH SECONDARY LOCKING ACTIVATED

COULEUR / COLOR	MATIERE / MATERIAL	DESCRIPTION / TITLE	REP. / ITEM
	ACIER INOX / *STAINLESS STEEL*	RESSORT (x2) / *SPRING (x2)*	7
JAUNE / *YELLOW*	PA66-GF30 (MATIERE: HB) / *(HB MATERIAL)*	CHARIOT SPRING-LOCK / *SPRING-LOCK SLIDE*	6
VERT / *GREEN*	SILICONE LUBRIFIE A 5% ; DURETE 30 SHORE A / *LUBRIFICATED SILICON TO 5% ; HARNESS 30 SH. A*	JOINT GROMMET / *GROMMET SEAL*	5
NOIR / *BLACK*	PBT-GF15 (MATIERE: HB) / *(HB MATERIAL)*	GRILLE ARRIERE / *REAR GRID*	4
VERT / *GREEN*	SILICONE LUBRIFIE A 4% ; DURETE 50 SHORE A / *LUBRIFICATED SILICON TO 4% ; HARNESS 50 SH. A*	JOINT INTERFACIAL / *INTERFACE SEAL*	3
VOIR TABLEAU DES REF. / *SEE TABLE OF PART NO*	PBT-GF15 (MATIERE: HB) / *(HB MATERIAL)*	DOUBLE VERROUILLAGE CODAGE (VOIR TABLEAU DES REFS) / *SECONDARY LOCKING CODING (SEE TABLE OF PART NO)*	2
NOIR / *BLACK*	PBT-GF15 (MATIERE: HB) / *(HB MATERIAL)*	BOITIER PORTE-CLIPS / *RECEPTACLE HOUSING*	1

THIS DRAWING IS A CONTROLLED DOCUMENT.

DIMENSIONS: mm

TOLERANCES UNLESS OTHERWISE SPECIFIED: 0 PLC ±; 1 PLC ±; 2 PLC ±0.2; 3 PLC ±; 4 PLC ±; ANGLES ±2°

MATERIAL: SEE TABLE / VOIR TABLEAU
FINISH: SEE TABLE / VOIR TABLEAU

DWN F. JODON 15FEB2008
CHK X. ROUILLARD 15FEB2008
APVD X. ROUILLARD 15FEB2008
PRODUCT SPEC 108-15378
APPLICATION SPEC 411-15712
WEIGHT 8.8g

TE Connectivity

NAME: 3 WAYS RECEPTACLE CONNECTOR SL
PORTE-CLIPS 3 Voies SL
SYSTEME A RESSORT

SIZE A1 | CAGE CODE 00779 | DRAWING NO C-1801179 | RESTRICTED TO -

CUSTOMER DRAWING | SCALE 3:1 | SHEET 1 OF 1 | REV E

4805 (3/11)