Inner Panels *EP Series*

Eclipse Series Enclosures



RoHS

Features

- Larger than standard NEMA panel used in same sized enclosure.
- 12gauge steel construction.
- Larger sizes have 2 or 4 formed flanges for added strength.
- Slotted corner design for easier mounting.
- Finished in recoatable powder white or unpainted galvanized.

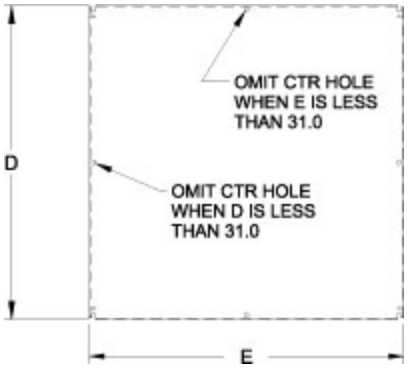

Mild Steel Part No.	Galvanized Part No.	Size D	Size E	Gauge
EP1210	EPG1210	10.20	8.20	12
EP1212	EPG1212	10.20	10.20	12
EP1224	EPG1224	10.20	22.20	12
EP1612	EPG1612	14.20	10.20	12
EP1616	EPG1616	14.20	14.20	12
EP1620	EPG1620	14.20	18.20	12
EP2012	EPG2012	18.20	10.20	12
EP2016	EPG2016	18.20	14.20	12
EP2020	EPG2020	18.20	18.20	12
EP2024	EPG2024	18.20	22.20	12
EP2412	EPG2412	22.20	10.20	12
EP2416	EPG2416	22.20	14.20	12
EP2420	EPG2420	22.20	18.20	12
EP2424	EPG2424	22.20	22.20	12
EP2430	EPG2430	22.20	28.20	12
EP2442	EPG2442	22.20	40.20	12
EP2448	EPG2448	22.20	46.20	12
EP3012	EPG3012	28.20	10.20	12
EP3016	EPG3016	28.20	14.20	12
EP3020	EPG3020	28.20	18.20	12
EP3024	EPG3024	28.20	22.20	12

Mild Steel Part No.	Galvanized Part No.	Size D	Size E	Gauge
EP3030	EPG3030	28.20	28.20	12
EP3036	EPG3036	28.20	34.20	12
EP3042	EPG3042	28.20	40.20	12
EP3048	EPG3048	28.20	46.20	12
EP3060	EPG3060	28.20	58.20	12
EP3624	EPG3624	34.20	22.20	12

Mild Steel	Galvanized	Size		
Part No.	Part No.	D	E	Gauge
EP3630	EPG3630	34.20	28.20	12
EP3636	EPG3636	34.20	34.20	12
EP3642	EPG3642	34.20	40.20	12
EP3648	EPG3648	34.20	46.20	12
EP3660	EPG3660	34.20	58.20	12
EP4224	EPG4224	40.20	22.20	12
EP4230	EPG4230	40.20	28.20	12
EP4236	EPG4236	40.20	34.20	12
EP4824	EPG4824	46.20	22.20	12
EP4830	EPG4830	46.20	28.20	12
EP4836	EPG4836	46.20	34.20	12
EP4848	EPG4848	46.20	46.20	12
EP6036	EPG6036	58.20	34.20	12
EP7230	EPG7230	70.20	28.20	12
EP7236	EPG7236	70.20	34.20	12

Tags: **inner panel**, **galvanized**, **steel**, **Eclipse**, **EN4SD**, **EP**

Data subject to change without notice.

© 2026. Hammond Manufacturing Ltd. All rights reserved.