Energy for life

CATALOG

FRIWO®

CONTENT

Power supply and charging solutions

FRIWO
FRIWO develops the world's first AC adapter 4
Pioneering spirit and innovational strength 6

INDUSTRIAL / I.T.E. 8
FOX6-X, FOX12-X 10
FOX18-X, FOX30-X 12
FOX6-X-USB, FOX12-X-USB 14
FOX6-F, FOX12-F 16
FOX18-F, FOX30-F 18
FOX5-F-USB, FOX6-F-USB, FOX12-F-USB 20
DT12, FOX30-D, FOX60-D 22

MEDICAL 24
FOX6-XM, FOX12-XM 26
FOX18-XM, FOX30-XM 28
FOX6-XM-USB, FOX12-XM-USB 30
FOX6-FM, FOX12-FM 32
FOX18-FM, FOX30-FM 34
FOX6-FM-USB, FOX12-FM-USB 36
FOX30-DM, DT50-M 38
DT80-M, DT150-M 40

FLUSH-MOUNTED 42
UP6, UP12/UP18, UP USB 44

OPEN FRAME 46
OF65, OF150 48
OF250, OF450 50

CHARGERS 52
Li-Ion GPP18, Li-Ion GPP36 54
Li-Ion FOX50-C, Li-Ion FOX90-C, Li-Ion FOX160-C 56
LiFeP04 GPP18, LiFeP04 GPP36 58
NiCd/NiMH GPP18, NiCd/NiMH GPP36, Pb PP8 60

BUNDLE MATRIX 62

BATTERY PACKS 64
1S2P/2S1P, 3S1P, 3S2P 66
4S1P, 4S2P, 5S1P, 5S2P 68
7S1P, 7S2P, 10S3P 70

LED DRIVERS 72
LT UP, LT10, LT20 74
LT40, LT40 WP 76
LT60, LT60 SQ, LT60 DPA 78
LT80/LT100, DIMMbox, LS12 80

ACCESSORIES 82
Primary adapters FOX system,
Primary adapters GPP system, Power cords 84
Secondary adapter system, Protective covers for LED drivers 86

FRIWO ACADEMY 88
Those who can, do

GLOSSAR 90

FRIWO WORLDWIDE / SALES 92

NOTES 94

INDUSTRIAL / I.T.E. S.8 **MEDICAL** S.24 **FLUSH-MOUNTED** S.42 **OPEN FRAME** S.46 **CHARGERS** S.52 **BATTERY PACKS** S.64 **LED DRIVERS** S.72 **ACCESSORIES** S.82

FRIWO catalog English. Article no. 1849899
Printed in Germany, 03/2016. The content of this brochure is subject to technical modification.

1882

1971

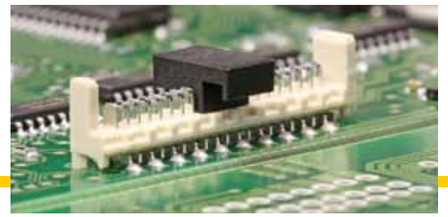

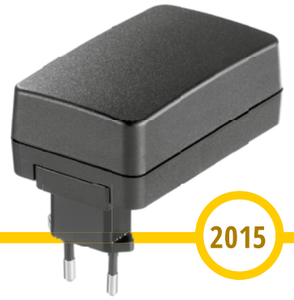

2015

Friemann & Wolf becomes world-famous under the brand name FRIWO.

FRIWO DEVELOPS THE WORLD'S FIRST AC ADAPTER

New standards in power supply technology: FRIWO launches the FOX product family.

1882
The idea that "sparked" it all: patenting of the Wolf'sche mine safety lamp for the mining industry.

1884
Heinrich Friemann and Carl Wolf establish the Friemann & Wolf machine and miner's lamp factory in Zwickau, Saxony.

1903
Carl Wolf develops the first electric rotating gang lamp with a lead-acid battery.

1907
Redesign of the miner's lamp with a nickel-cadmium battery. Testing at the Zeche Emscher-Lippe mine. Production of improved lead-acid batteries with solid electrolyte begins.

1910
Friemann & Wolf, now world-famous under the brand name FRIWO, begins licensed production of an improved NiCd battery and in-house development.

1927
FRIWO receives German imperial patent 446183 for the first electric mining cap lamp.

1951
Production of a silver-zinc battery system starts, and Silberkraft Leichtakkumulatoren GmbH in Rüdesheim is founded (relocation to Duisburg in 1959).

1963
Expansion of NiCd battery production for stationary and mobile use. Production of security lighting and emergency power supply systems with individual, group and central batteries also increases. In-house development of silver-zinc and silver-cadmium batteries.

1967
Manufacturing of large-scale silver-zinc batteries begins.

1971
Friemann & Wolf Gerätebau GmbH founded in Duisburg, and the related acquisition of an electromechanical and electronics production plant in Ostbevern, where the company's charger and power supply technology business begins.

1971
FRIWO develops and manufactures the world's first AC adapter. It is used with a cassette recorder. A total of 1,000 devices are manufactured in the first week of production.

1979
The company extends its range of products to include power supply and charger modules for IT systems and peripheral devices.

1982
With a daily capacity of 25,000 plug-in power supply units, Friemann & Wolf Gerätebau GmbH becomes Europe's largest manufacturer of small power supply systems and chargers. Production of charger modules and charging monitoring devices begins.

1992
FRIWO is the first company in the industry to be certified according to EN DIN ISO 9001.

1993
FRIWO is the first company to produce a charger for environmentally friendly NiMH batteries.

2005
FRIWO produces its billionth charger.

2014
FRIWO develops www.friwo-shop.com, its own online B2B store. In particular, it allows customers to order small quantities of devices from the company's standard portfolio, easily and directly.

2015
New standards in power supply: FRIWO launches the FOX product family, which combines extremely high efficiency with almost no loss of power in standby mode.

Particular emphasis is placed on product quality: high-class power supply and charging solutions.

PIONEERING SPIRIT AND INNOVATIONAL STRENGTH

The benchmark for tomorrow is the benchmark for today: prepared for the future.

FRIWO has a pioneering spirit and embodies the power of innovation and German engineering expertise. This dynamic company boasts a global network of experts. With modern development centers, manufacturing facilities and sales locations in Europe, Asia and North America, FRIWO is present in all of the world's most important markets.

The company's portfolio includes standard and custom power supply and charging solutions. It sells power supply units and chargers, drivers and dimmer solutions for LED technology, as well as a full range of accessories, from primary and secondary adapters to power cords and protective covers for LED drivers.

As part of its program of expansion, FRIWO recently established its Battery Business division. It produces battery packs carrying the "Made in Germany" label and allows FRIWO to offer complete mobile power supply solutions, from the charger to the battery, from a single source.

For FRIWO, **this development also represents** a return to its roots. Few other companies can match its experience in this technological field. It began manufacturing nickel-cadmium and lead-acid batteries in the early 20th century and, in 1971, developed the world's first AC adapter.

The company's high quality standards are impressively demonstrated by its expertise in medical technology. There are few other fields in which reliable product safety, durability and resilience are as essential.

FRIWO is also constantly working to build on those high quality standards, so that it can meet the needs of the future today. For example, the FOX product family already exceeded the U.S. Department of Energy's efficiency standards, which have been binding in the United States since 2016, well in advance. This long-term approach means that the company is prepared for whatever the future may hold.

An optimized logistics and manufacturing concept allows FRIWO to ensure maximum product availability. Rapid delivery times are achieved through the systematic configuration of product variants. And FRIWO works with selected partners to offer tooling and development services (E^2MS).

Industrial / I.T.E.

LOOKING TO THE FUTURE

Many applications, whether static or mobile, today require a safe and reliable power supply. FRIWO's I.T.E. (information technology equipment) power supply units have always set standards. And the new, next-generation FOX platform allows the company to exceed the high quality standards that its customers have come to expect. FOX power supply units are smaller, more powerful and more efficient than their predecessors. FRIWO's new technical concept has again increased energy density. Thanks to a patented interchangeable adapter system, its devices are suitable for use under the toughest conditions and in the harshest environments. New: the optional IP42 adapter from FRIWO is an interchangeable adapter system that offers additional protection for use in damp environments.

Minimal leakage current means that FRIWO's power supply units are also ideally suited for use with measurement technologies, because they prevent unwanted influences that distort measured values. The FOX product family already meets the U.S. Department of Energy's stringent 2016 DOE energy-efficiency standards, which include stricter requirements regarding the efficiency and standby loss of power supply units. The harmonization of European thresholds with the U.S. standard in 2017 is currently under discussion. As a result, FRIWO already offers devices that exceed future statutory requirements, ensuring the worldwide use of your application. Choosing FOX today is an investment in the future, offering security tomorrow and beyond.

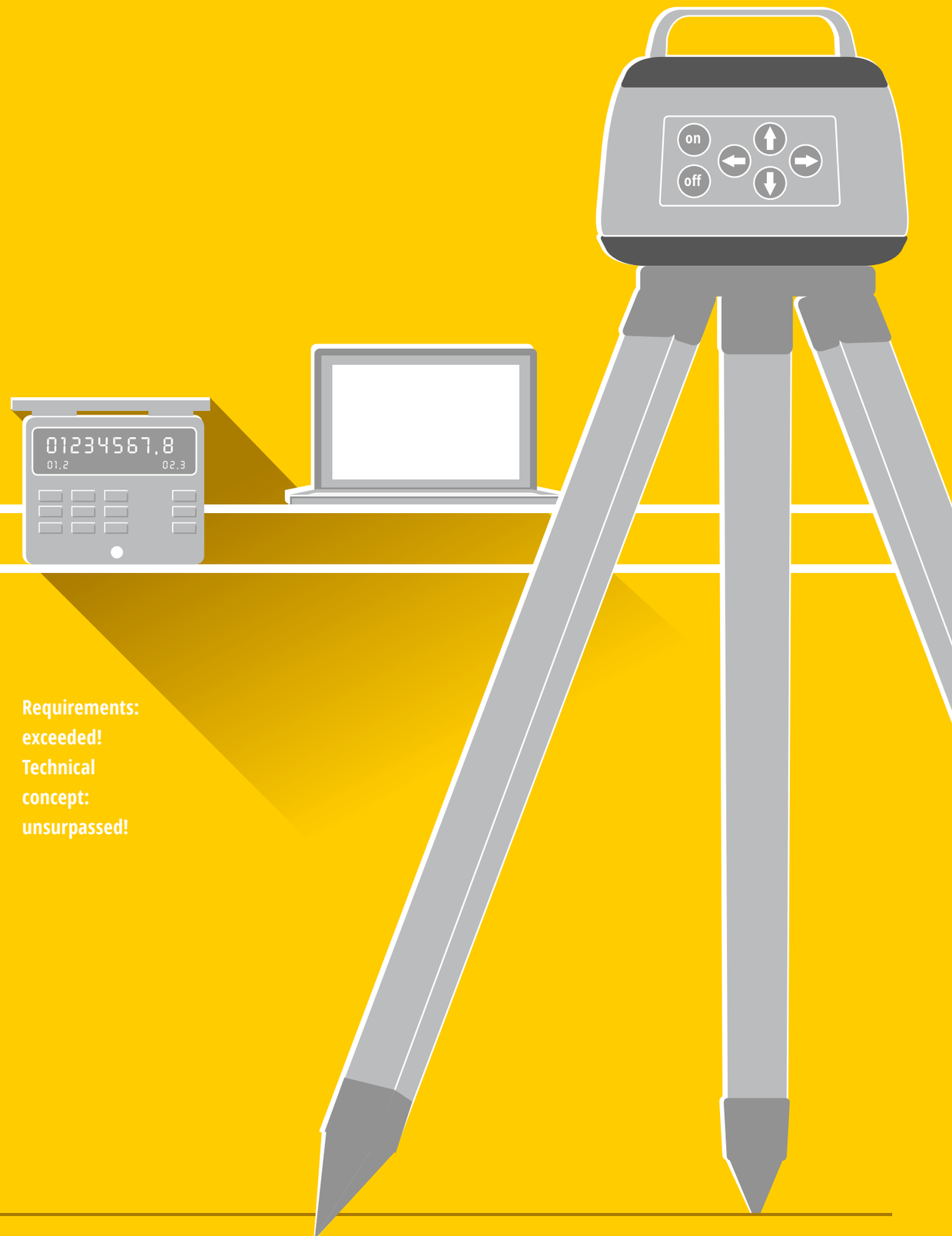

Requirements: exceeded! Technical concept: unsurpassed!

A further increase in energy density. Because FRIWO can.

Switchmode power supplies

INDUSTRIAL / I. T. E.

with interchangeable adapter system.
All products conform to IEC 60950.

Characteristics

- Efficiency level VI
- Overload protection
- Overvoltage protection
- Continuously short circuit proof

Technical data

Input voltage	100 – 240 V ± 10 %
Frequency	50 – 60 Hz
Input current	160 – 80 mA (FOX6-X) 250 mA (FOX12-X)
Leakage current	≤ 10 µA (FOX6-X) ≤ 200 µA (FOX12-X)
Output voltage tolerance	± 5 %
Turn-on delay	≤ 2 s
Stand-by	≤ 0.1 W
Efficiency (typ. full load)	≥ 80 % (FOX6-X) ≥ 83 % (FOX12-X)
MTBF	200.000 h

Environmental specifications

Operating temperature	0 – 45° C (FOX 6-X) 0 – 40° C (FOX 12-X)
Humidity	10 – 95 %
Storage temperature	-40 – 70° C
Operating altitude	2000 m

Safety specifications

Standards	IEC 60950, IEC 60065, IEC 60335-1
Approvals	EU, USA, AUS, JPN
Safety class	II
EMC	EN 55022, EN 55024

Mechanical data

Dimensions	55.0 x 31.5 x 41.0 mm (FOX6-X) 75.0 x 31.5 x 41.0 mm (FOX12-X)
Weight	112 g (FOX6-X) 127 g (FOX12-X)
Connectors	AC input: Interchangeable primary adapter system DC output: Secondary adapter system

FOX6-X

FW8002

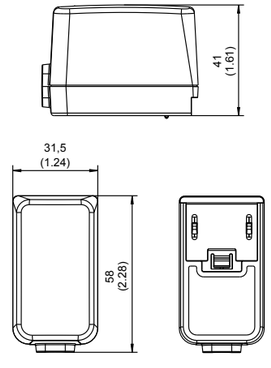

Alle Abmessungen in Millimeter (Inch), Abweichung ± 0,5 (0.02)
All Dimensions in Millimeter (Inch), Deviation ± 0,5 (0.02)

Output data			Worldwide
Voltage	Current	Ripple voltage	Article no.
5 V	1400 mA	180 mV pp	1898106
5.9 V	1200 mA	150 mV pp	1898107
7.5 V	800 mA	150 mV pp	1898108
9 V	800 mA	150 mV pp	1898109
12 V	600 mA	200 mV pp	1898110
15 V	500 mA	200 mV pp	1898111
18 V	400 mA	180 mV pp	1898112
24 V	300 mA	240 mV pp	1898113
48 V	125 mA	480 mV pp	1898114

FOX12-X

FW8000

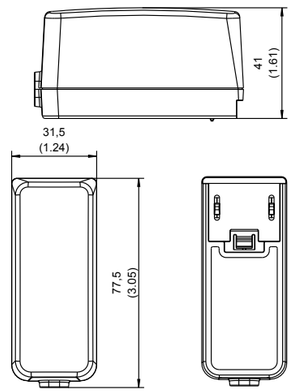

Alle Abmessungen in Millimeter (Inch), Abweichung ± 0,5 (0.02)
All Dimensions in Millimeter (Inch), Deviation ± 0,5 (0.02)

Output data			Worldwide
Voltage	Current	Ripple voltage	Article no.
5 V	2000 mA	100 mV pp	1898115
6 V	2000 mA	100 mV pp	1898116
7.5 V	1600 mA	100 mV pp	1898117
9 V	1300 mA	100 mV pp	1898118
12 V	1000 mA	100 mV pp	1897510
15 V	800 mA	100 mV pp	1898120
18 V	660 mA	100 mV pp	1898121
24 V	500 mA	100 mV pp	1898122
48 V	250 mA	150 mV pp	1898123

Please find adapters and accessories on page 82.
For notes on connection and safe operation, please refer to the operating instructions.

Switchmode power supplies

INDUSTRIAL / I. T. E.

with interchangeable adapter system.
All products conform to IEC 60950.

Characteristics

- Efficiency level VI
- Overload protection
- Overvoltage protection
- Continuously short circuit proof

Technical data

Input voltage	100 – 240 V ± 10 %
Frequency	50 – 60 Hz
Input current	400 – 200 mA (FOX18-X)
	600 – 300 mA (FOX30-X)
Leakage current	≤ 10 µA
Output voltage tolerance	± 5 %
Turn-on delay	≤ 1 s (FOX18-X)
	≤ 2 s (FOX30-X)
Stand-by	≤ 0.1 W
Efficiency (typ. full load)	≥ 86 % (FOX18-X)
	≥ 87 % (FOX30-X)
MTBF	200.000 h

Environmental specifications

Operating temperature	0 – 50° C (FOX18-X)
	0 – 45° C (FOX30-X)
Humidity	10 – 95 %
Storage temperature	-40 – 70° C
Operating altitude	2000 m

Safety specifications

Standards	IEC 60950, IEC 60335-1, IEC 60065
Approvals	EU, USA, AUS, JPN
Safety class	II
EMC	EN 55022, EN 55024

Mechanical data

Dimensions	77.0 x 50.0 x 34.0 mm (FOX18-X)
	90.0 x 55.0 x 34.0 mm (FOX30-X)
Weight	157 g (FOX18-X)
	187 g (FOX30-X)
Connectors	AC input: Interchangeable primary adapter system
	DC output: Secondary adapter system

FOX18-X

FW8001

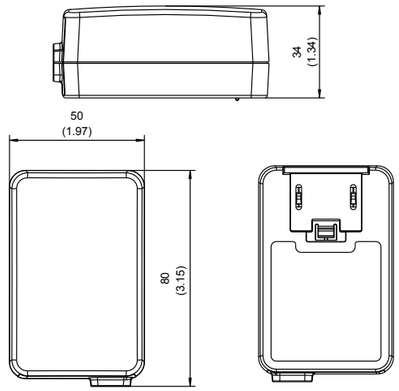

Alle Abmessungen in Millimeter (Inch), Abweichung ± 0.5 (0.02)
All Dimensions in Millimeter (Inch), Deviation ± 0,5 (0.02)

Output data			Worldwide
Voltage	Current	Ripple voltage	Article no.
5 V	3000 mA	150 mV pp	1898142
5.9 V	3000 mA	120 mV pp	1898143
7.5 V	2400 mA	120 mV pp	1898144
9 V	2000 mA	120 mV pp	1898145
12 V	1500 mA	120 mV pp	1898146
15 V	1200 mA	150 mV pp	1898147
18 V	1000 mA	180 mV pp	1898148
24 V	750 mA	180 mV pp	1898149
48 V	375 mA	200 mV pp	1898150

FOX30-X

FW8030

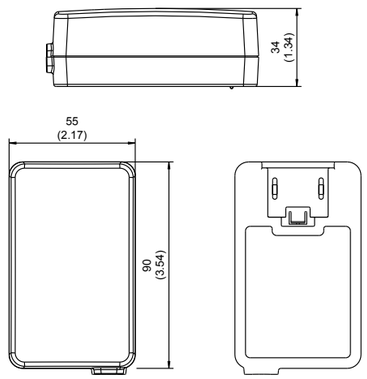

Alle Abmessungen in Millimeter (Inch), Abweichung ± 0,5 (0.02)
All Dimensions in Millimeter (Inch), Deviation ± 0,5 (0.02)

Output data			Worldwide
Voltage	Current	Ripple voltage	Article no.
5 V	5000 mA	150 mV pp	1898151
6 V	4200 mA	150 mV pp	1898152
7.5 V	4000 mA	150 mV pp	1898153
9 V	3300 mA	120 mV pp	1898154
12 V	2500 mA	120 mV pp	1898155
15 V	2000 mA	150 mV pp	1898156
18 V	1600 mA	200 mV pp	1898157
24 V	1250 mA	200 mV pp	1898158
48 V	625 mA	300 mV pp	1898159

Please find adapters and accessories on page 82.
For notes on connection and safe operation, please refer to the operating instructions.

Switchmode power supplies

INDUSTRIAL / I. T. E.

with interchangeable adapter system.
All products conform to IEC 60950.

Characteristics

- Efficiency level VI
- Overload protection
- Overvoltage protection
- Continuously short circuit proof

Technical data

Input voltage	100 – 240 V ± 10 %
Frequency	50 – 60 Hz
Input current	120 mA (Article no. 1898582) 160 mA (Article no. 1897843) 250 mA (Article no. 1897730)
Leakage current	≤ 10 µA (FOX6-X-USB) ≤ 90 µA (FOX12-X-USB)
Output voltage tolerance	± 5 %
Turn-on delay	≤ 2 s
Stand-by	≤ 0.1 W
Efficiency (typ. full load)	≥ 76 % (FOX6-X-USB) ≥ 80 % (FOX12-X-USB)
MTBF	200.000 h

Environmental specifications

Operating temperature	0 – 45° C
Humidity	10 – 95 %
Storage temperature	-40 – 70° C
Operating altitude	2000 m

Safety specifications

Standards	IEC 60950, IEC 60065, IEC 60335
Approvals	EU, USA, AUS, JPN
Safety class	II
EMC	EN 55022, EN 55024

Mechanical data

Dimensions	55.0 x 31.5 x 41.0 mm (FOX6-X-USB) 75.0 x 31.5 x 41.0 mm (FOX12-X-USB)
Weight	50 g (FOX6-X-USB) 65 g (FOX12-X-USB)
Connectors	AC input: Interchangeable primary adapter system DC output: USB socket type A

FOX6-X-USB

FW8002/USB

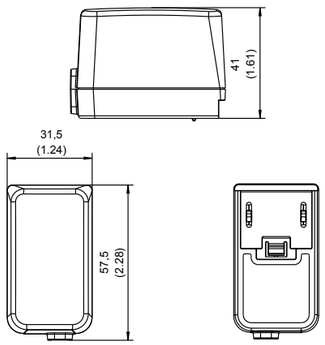

Alle Abmessungen in Millimeter (Inch), Abweichung ± 0,5 (0.02)
All Dimensions in Millimeter (Inch), Deviation ± 0,5 (0.02)

Output data			Worldwide
Voltage	Current	Ripple voltage	Article no.
5 V	**1400 mA**	**80 mV pp**	**1897843**
5 V	**1000 mA**	**80 mV pp**	**1898582**

FOX12-X-USB

FW8000/USB

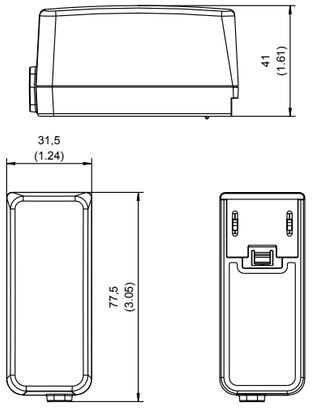

Alle Abmessungen in Millimeter (Inch), Abweichung ± 0,5 (0.02)
All Dimensions in Millimeter (Inch), Deviation ± 0,5 (0.02)

Output data			Worldwide
Voltage	Current	Ripple voltage	Article no.
5 V	**2200 mA**	**80 mV pp**	**1897730**

Please find adapters and accessories on page 82.
For notes on connection and safe operation, please refer to the operating instructions.

Switchmode power supplies

INDUSTRIAL / I. T. E.

with fixed AC plug.
All products conform to IEC 60950.

Characteristics

- Efficiency level VI
- Overload protection
- Overvoltage protection
- Continuously short circuit proof

Technical data

Input voltage	100 – 240 V ± 10 %
Frequency	50 – 60 Hz
Input current	160 mA (FOX6-F)
	250 mA (FOX12-F)
Leakage current	≤ 10 µA (FOX6-F)
	≤ 200 µA (FOX12-F)
Output voltage tolerance	± 5 %
Turn-on delay	≤ 2 s
Stand-by	≤ 0.1 W
Efficiency (typ. full load)	≥ 80 % (FOX6-F)
	≥ 83 % (FOX12-F)
MTBF	200.000 h

Environmental specifications

Operating temperature	0 – 45° C (FOX6-F)
	0 – 40° C (FOX12-F)
Humidity	10 – 95 %
Storage temperature	-40 – 70° C
Operating altitude	2000 m

Safety specifications

Standards	IEC 60950, IEC 60065, IEC 60335-1
Approvals	EU, USA, AUS, JPN
Safety class	II
EMC	EN 55022, EN 55024

Mechanical data

Dimensions	55.0 x 31.5 x 41.0 mm (FOX6-F)
	75.0 x 31.5 x 41.0 mm (FOX12-F)
Weight	114 g (FOX6-F USA/Japan)
	119 g (FOX6-F EURO)
	130 g (FOX12-F USA/Japan)
	134 g (FOX12-F AUS)
	135 g (FOX12-F EURO)
	143 g (FOX12-F UK)
Connectors	AC input: See article no.
	DC output: Secondary adapter system

FOX6-F

FW8002

available from May 2016

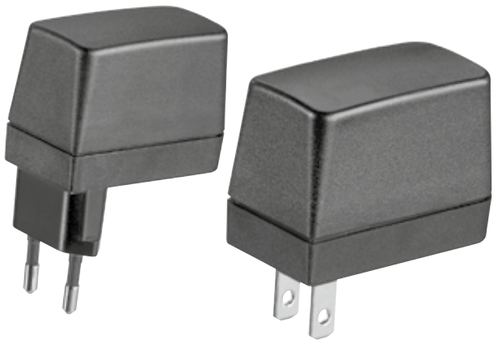

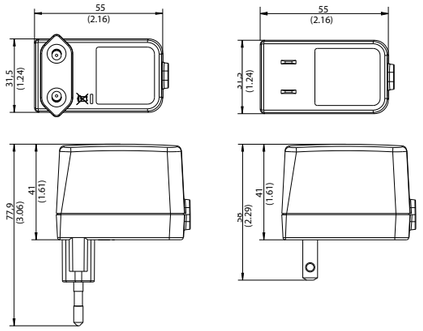

Alle Abmessungen in Millimeter (Inch), Abweichung ± 0,5 (0.02)
All Dimensions in Millimeter (Inch), Deviation ± 0,5 (0.02)

Output data			EURO	USA/Japan
Voltage	Current	Ripple voltage	Article no.	Article no.
5 V	1400 mA	180 mV pp	1898721	1898730
5.9 V	1200 mA	150 mV pp	1898722	1898731
7.5 V	950 mA	150 mV pp	1898723	1898732
9 V	770 mA	150 mV pp	1898724	1898733
12 V	600 mA	200 mV pp	1898725	1898734
15 V	480 mA	200 mV pp	1898726	1898735
18 V	400 mA	180 mV pp	1898727	1898736
24 V	300 mA	240 mV pp	1898728	1898737
48 V	150 mA	480 mV pp	1898729	1898738

FOX12-F

FW8000

available from May 2016

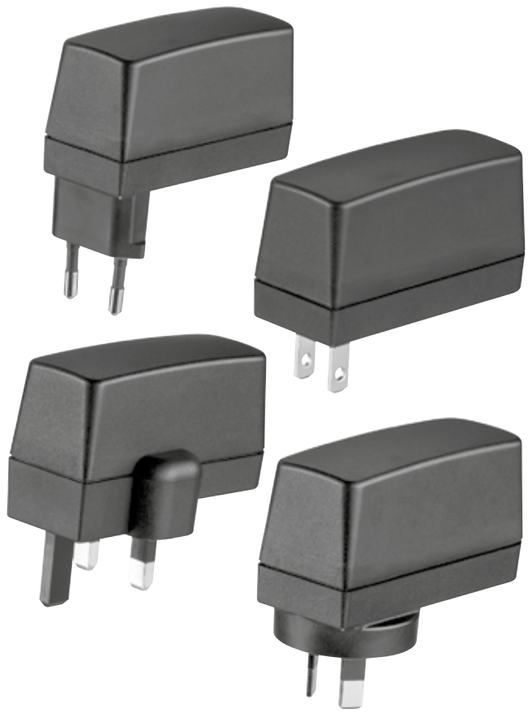

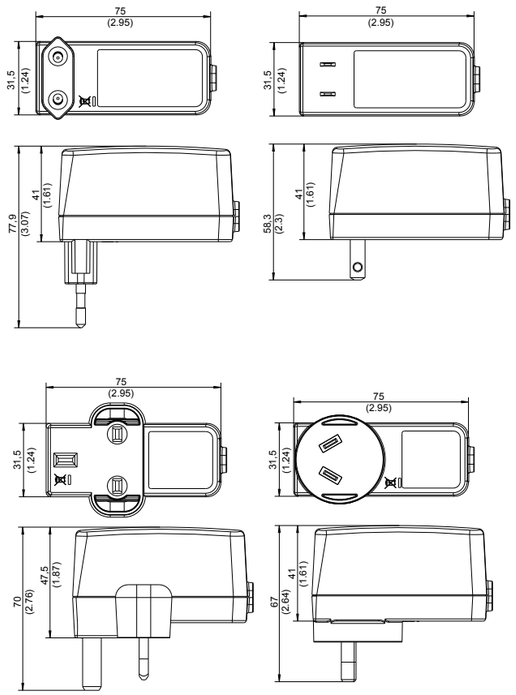

Alle Abmessungen in Millimeter (Inch), Abweichung ± 0,5 (0.02)
All Dimensions in Millimeter (Inch), Deviation ± 0,5 (0.02)

Output data			EURO	USA/Japan	UK	AUS
Voltage	Current	Ripple voltage	Article no.	Article no.	Article no.	Article no.
5 V	2000 mA	100 mV pp	1898758	1898767	1898831	1898840
6 V	2000 mA	100 mV pp	1898759	1898768	1898832	1898841
7.5 V	1600 mA	100 mV pp	1898760	1898769	1898833	1898842
9 V	1300 mA	100 mV pp	1898761	1898770	1898834	1898843
12 V	1000 mA	100 mV pp	1898762	1898771	1898835	1898844
15 V	800 mA	100 mV pp	1898763	1898772	1898836	1898845
18 V	660 mA	100 mV pp	1898764	1898773	1898837	1898846
24 V	500 mA	100 mV pp	1898765	1898774	1898838	1898847
48 V	250 mA	150 mV pp	1898766	1898775	1898839	1898848

Please find adapters and accessories on page 82.
For notes on connection and safe operation, please refer to the operating instructions.

Switchmode power supplies

INDUSTRIAL / I. T. E.

with fixed AC plug.
All products conform to IEC 60950.

Characteristics

- Efficiency level VI
- Overload protection
- Overvoltage protection
- Continuously short circuit proof

Technical data

Input voltage	100 – 240 V ± 10 %
Frequency	50 – 60 Hz
Input current	400 – 200 mA (FOX18-F)
	600 – 300 mA (FOX30-F)
Leakage current	≤ 10 µA
Output voltage tolerance	± 5 %
Turn-on delay	≤ 1 s (FOX18-F)
	≤ 2 s (FOX30-F)
Stand-by	≤ 0.1 W
Efficiency (typ. full load)	≥ 86 % (FOX18-F)
	≥ 87 % (FOX30-F)
MTBF	200.000 h

Environmental specifications

Operating temperature	0 – 50° C (FOX18-F)
	0 – 45° C (FOX30-F)
Humidity	10 – 95 %
Storage temperature	-40 – 70° C
Operating altitude	2000 m

Safety specifications

Standards	IEC 60950, IEC 60065, IEC 60335-1
Approvals	EU, USA, AUS, JPN
Safety class	II
EMC	EN 55022, EN 55024

Mechanical data

Dimensions	77.0 x 50.0 x 34.0 mm (FOX18-F)
	90.0 x 55.0 x 34.0 mm (FOX30-F)
Weight	164 g (FOX18-F USA/Japan)
	166 g (FOX18-F EURO)
	193 g (FOX30-F USA/Japan)
	195 g (FOX30-F EURO)
Connectors	AC input: See article no.
	DC output: Secondary adapter system

FOX18-F

FW8001 **available from May 2016**

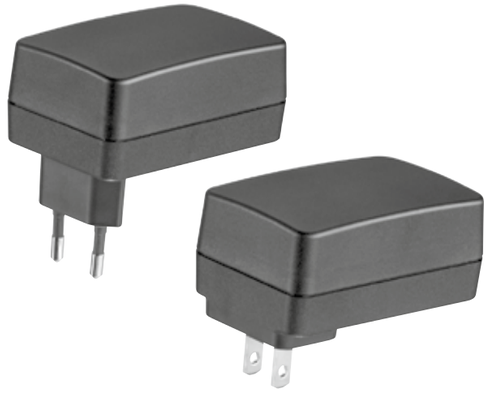

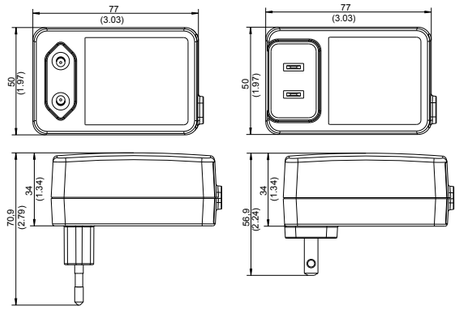

Alle Abmessungen in Millimeter (Inch), Abweichung ± 0,5 (0.02)
All Dimensions in Millimeter (Inch), Deviation ± 0,5 (0.02)

Output data			EURO	USA/Japan
Voltage	Current	Ripple voltage	Article no.	Article no.
5 V	3000 mA	150 mV pp	1898877	1898886
5.9 V	3000 mA	120 mV pp	1898878	1898887
7.5 V	2400 mA	120 mV pp	1898879	1898888
9 V	2000 mA	120 mV pp	1898880	1898889
12 V	1500 mA	120 mV pp	1898881	1898890
15 V	1200 mA	150 mV pp	1898882	1898891
18 V	1000 mA	180 mV pp	1898883	1898892
24 V	750 mA	180 mV pp	1898884	1898893
48 V	375 mA	200 mV pp	1898885	1898894

FOX30-F

FW8030 **available from May 2016**

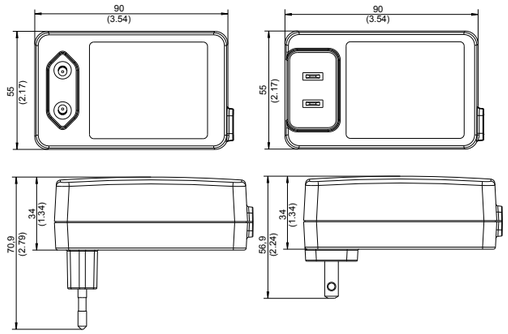

Alle Abmessungen in Millimeter (Inch), Abweichung ± 0,5 (0.02)
All Dimensions in Millimeter (Inch), Deviation ± 0,5 (0.02)

Output data			EURO	USA/Japan
Voltage	Current	Ripple voltage	Article no.	Article no.
5 V	5000 mA	150 mV pp	1898795	1898804
6 V	4200 mA	150 mV pp	1898796	1898805
7.5 V	4000 mA	150 mV pp	1898797	1898806
9 V	3300 mA	120 mV pp	1898798	1898807
12 V	2500 mA	120 mV pp	1898799	1898808
15 V	2000 mA	150 mV pp	1898800	1898809
18 V	1600 mA	200 mV pp	1898801	1898810
24 V	1250 mA	200 mV pp	1898802	1898811
48 V	625 mA	300 mV pp	1898803	1898812

Please find adapters and accessories on page 82.
For notes on connection and safe operation, please refer to the operating instructions.

Switchmode power supplies

INDUSTRIAL / I. T. E.

with fixed AC plug.
All products conform to IEC 60950.

Characteristics

- Efficiency level VI
- Overload protection
- Overvoltage protection
- Continuously short circuit proof

Technical data

Input voltage	100 – 240 V ± 10 %
Frequency	50 – 60 Hz
Input current	150 mA (FOX5-F-USB)
	160 – 80 mA (FOX6-F-USB)
	250 mA (FOX12-F-USB)
Leakage current	≤ 10 µA (FOX5-F-USB, FOX6-F-USB)
	≤ 250 µA (FOX12-F-USB)
Output voltage tolerance	± 5 %
Turn-on delay	≤ 2 s
Stand-by	≤ 0.1 W
Efficiency (typ. full load)	≥ 74 % (FOX5-F-USB)
	≥ 76 % (FOX6-F-USB)
	≥ 79 % (FOX12-F-USB)
MTBF	200.000 h

Environmental specifications

Operating temperature	0 – 40° C (FOX5-F-USB)
	0 – 45° C (FOX6-F-USB, FOX12-F-USB)
Humidity	10 – 95 %
Storage temperature	-20 – 70° C (FOX5-F-USB)
	-40 – 70° C (FOX6-F-USB, FOX12-F-USB)
Operating altitude	2000 m

Safety specifications

Standards	IEC 60950, IEC 60065, IEC 60335-1
Approvals	EU, USA, AUS, JPN
Safety class	II
EMC	EN 55022, EN 55024

Mechanical data

Dimensions	40.0 x 65.0 x 18.0 mm (FOX 5-F-USB)
	55.0 x 31.5 x 41.0 mm (FOX 6-F-USB)
	75.0 x 31.5 x 41.0 mm (FOX 12-F-USB)
Weight	25 g (FOX5-F-USB)
	52 g (FOX6-F-USB USA/Japan)
	57 g (FOX6-F-USB EURO)
	68 g (FOX12-F-USB USA/Japan)
	72 g (FOX12-F-USB AUS)
	73 g (FOX12-F-USB EURO)
	81 g (FOX12-F-USB UK)
Connectors	AC input: See article no.
	DC output: USB socket type A

Please find adapters and accessories on page 82.
For notes on connection and safe operation, please refer to the operating instructions.

FOX5-F-USB

FW7713/EU
FW8005/US

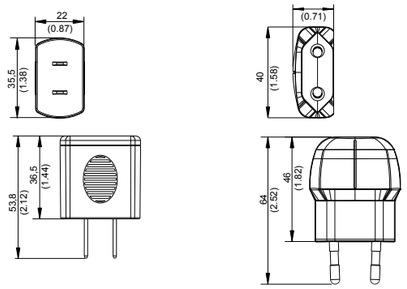

Alle Abmessungen in Millimeter (Inch), Abweichung ± 0,5 (0.02)
All Dimensions in Millimeter (Inch), Deviation ± 0,5 (0.02)

Output data				EURO	USA
Voltage	Current	Ripple voltage	Colour	Article no.	Article no.
5 V	1000 mA	80 mV pp	black	1897974	1898333
5 V	1000 mA	80 mV pp	white	1899018	1899017

FOX6-F-USB

FW8002/USB **available from May 2016**

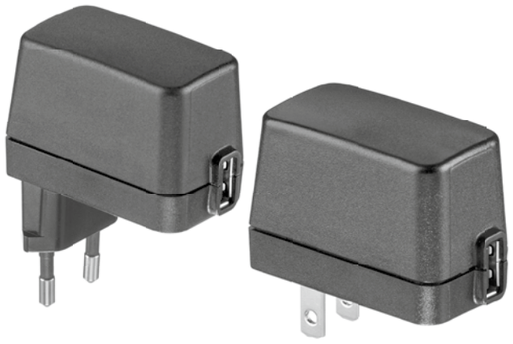

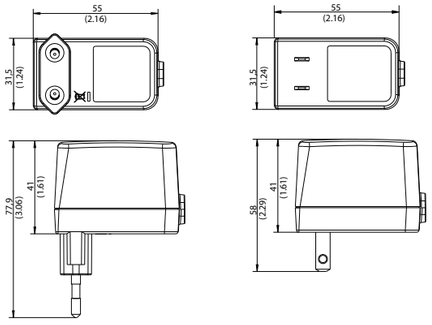

Alle Abmessungen in Millimeter (Inch), Abweichung ± 0,5 (0.02)
All Dimensions in Millimeter (Inch), Deviation ± 0,5 (0.02)

Output data			EURO	USA/Japan
Voltage	Current	Ripple voltage	Article no.	Article no.
5 V	1000 mA	80 mV pp	1898875	1898876
5 V	1400 mA	80 mV pp	1898867	1898868

FOX12-F-USB

FW8000/USB **available from May 2016**

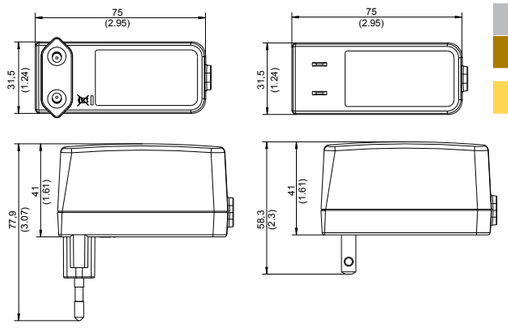

Alle Abmessungen in Millimeter (Inch), Abweichung ± 0,5 (0.02)
All Dimensions in Millimeter (Inch), Deviation ± 0,5 (0.02)

Output data			EURO	USA/Japan	UK	AUS
Voltage	Current	Ripple voltage	Article no.	Article no.	Article no.	Article no.
5 V	2200 mA	80 mV pp	1898895	1898896	1898897	1898898

Switchmode power supplies

INDUSTRIAL / I. T. E.

Desktop

All products conform to IEC 60950.

Characteristics

- Efficiency level VI
- Overload protection
- Overvoltage protection
- Continuously short circuit proof

Technical data

Input voltage	100 – 240 V
Frequency	50 – 60 Hz
Input current	300 mA (DT12) 600 mA (FOX30-D) 1300 mA (FOX60-D)
Leakage current	≤ 10 µA (FOX30-D) ≤ 250 µA (DT12, FOX60-D)
Output voltage tolerance	± 5 %
Turn-on delay	≤ 2 s
Stand-by	≤ 0.1 W
Efficiency (typ. full load)	≥ 87 % (DT12, FOX30-D) ≥ 88 % (FOX60-D)
MTBF	200.000 h

Environmental specifications

Operating temperature	0 – 45° C (FOX30-D) 0 – 40° C (DT12, FOX60-D)
Humidity	10 – 95 %
Storage temperature	-40 – 70° C (FOX30-D) -10 – 70° C (DT12, FOX60-D)
Operating altitude	2000 m

Safety specifications

Standards	IEC 60950, IEC 60335, IEC 60065
Approvals	EU, USA, AUS, JPN
Safety class	II
EMC	EN 55022, EN 55024

Mechanical data

Dimensions	40.0 x 92.0 x 27.5 mm (DT12) 90.0 x 55.0 x 32.0 mm (FOX30-D) 114.5 x 49.5 x 33.0 mm (FOX60-D)
Weight	135 g (DT12) 187 g (FOX30-D) 250 g (FOX60-D)
Connectors	AC input: 2 pole, IEC 60320-C8 socket DC output: Secondary adapter system

Please find adapters and accessories on page 82.
For notes on connection and safe operation, please refer to the operating instructions.

DT12

FW7402

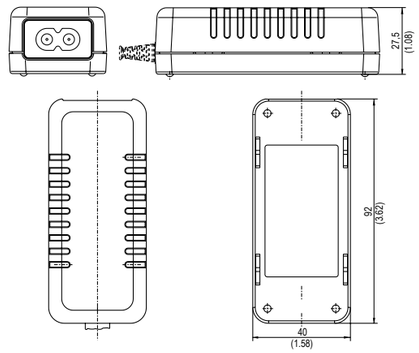

Alle Abmessungen in Millimeter (Inch), Abweichung ± 0,5 (0.02)
All Dimensions in Millimeter (Inch), Deviation ± 0,5 (0.02)

Output data			Worldwide
Voltage	Current	Ripple voltage	Article no.
5 V	2000 mA	200 mV pp	1898975
5.9 V	1700 mA	200 mV pp	1898976
7.5 V	1400 mA	200 mV pp	1898977
9 V	1200 mA	180 mV pp	1898978
12 V	1000 mA	180 mV pp	1898757
15 V	800 mA	150 mV pp	1898979
18 V	660 mA	180 mV pp	1898980
24 V	500 mA	120 mV pp	1898981

FOX30-D

FW8030/DT

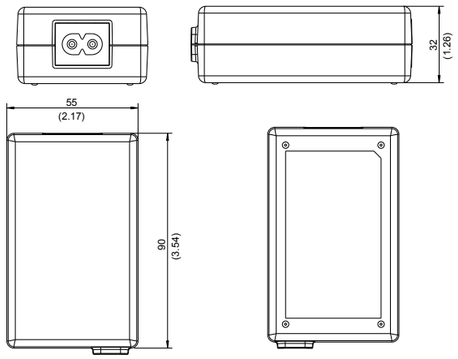

Alle Abmessungen in Millimeter (Inch), Abweichung ± 0,5 (0.02)
All Dimensions in Millimeter (Inch), Deviation ± 0,5 (0.02)

Output data			Worldwide
Voltage	Current	Ripple voltage	Article no.
5 V	5000 mA	150 mV pp	1898169
6 V	4200 mA	150 mV pp	1898170
7.5 V	4000 mA	150 mV pp	1898171
9 V	3300 mA	120 mV pp	1898172
12 V	2500 mA	120 mV pp	1898173
15 V	2000 mA	150 mV pp	1898174
18 V	1600 mA	200 mV pp	1898175
24 V	1250 mA	200 mV pp	1898177
48 V	625 mA	300 mV pp	1898178

FOX60-D

FW8060

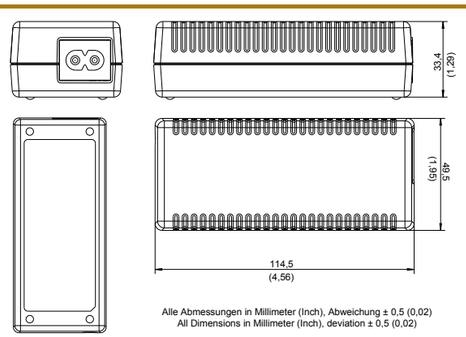

Alle Abmessungen in Millimeter (Inch), Abweichung ± 0,5 (0,02)
All Dimensions in Millimeter (Inch), deviation ± 0,5 (0,02)

Output data			Worldwide
Voltage	Current	Ripple voltage	Article no.
12 V	5000 mA	240 mV pp	1898544
15 V	4000 mA	240 mV pp	1898545
18 V	3300 mA	240 mV pp	1898546
24 V	2500 mA	240 mV pp	1898547
48 V	1250 mA	480 mV pp	1898548

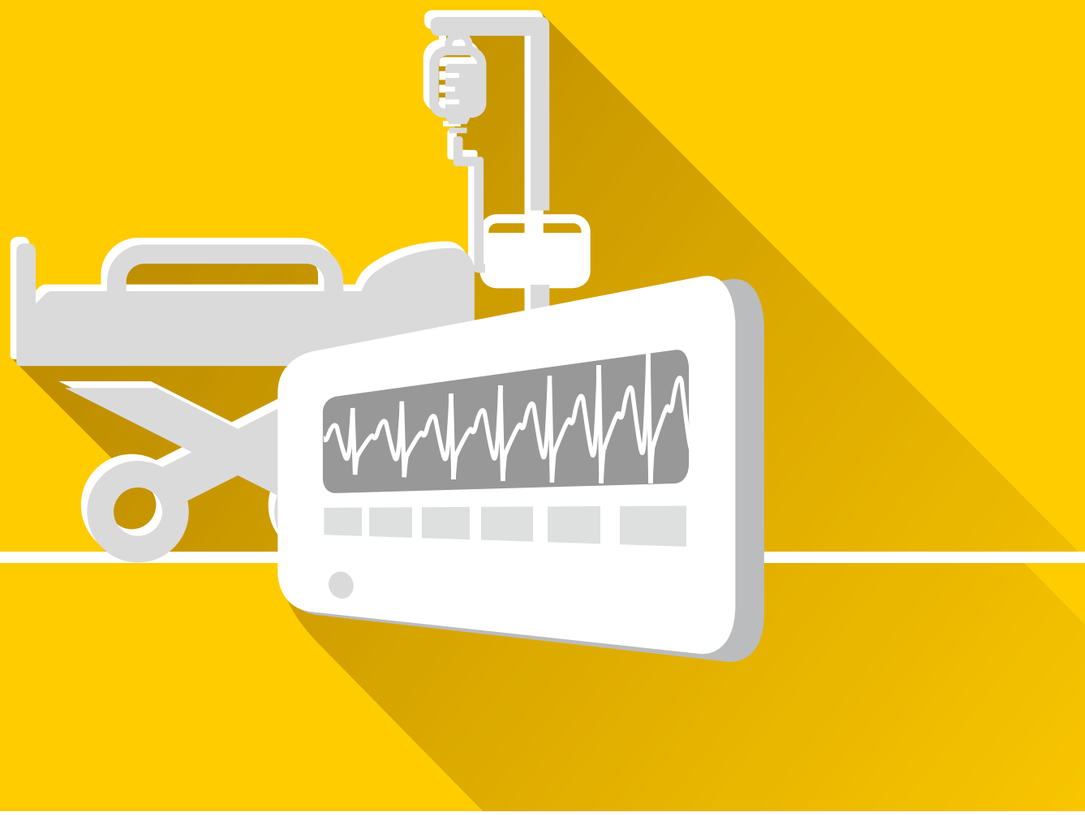

Power supply units you can trust: Robust. Safe. Durable.

Medical

DIAGNOSIS: MAXIMUM SAFETY

Power pack: That description applies doubly to FRIWO's power supply units for medical technology. Its product range sets standards in terms of performance and durability, because maximum safety for patients and medical staff is all that counts.
FRIWO's medical products are designed for the most sensitive applications and for use under the harshest conditions. They must continue to work perfectly despite falls in the emergency room while protecting patients by offering the lowest possible levels of leakage current. FRIWO develops and manufactures power supply units you can trust. In order to ensure maximum patient safety, FRIWO medical technology devices are equipped with its 2 x MOPP (Means of Patient Protection) safety system and feature a minimal leakage current of ≤ 10 µA as well as double-sealed casings. What is more, FRIWO's power supply solutions already meet the stricter requirements of the 4th edition of IEC 60601-1-2.

A particular highlight of the FOX product family is its interchangeable adapter system with IP42 protection (against drops of water and dampness), which is available as an optional accessory. In practice, this means that the devices can be cleaned using wet cloths – an invaluable advantage in sterile environments. FRIWO's additional features make its products easier to use, day in, day out.
On the safe side, despite increasing regulatory requirements: The FOX product family already meets the U.S. Department of Energy's stringent 2016 DOE efficiency standards for medical applications, even though this segment is not currently covered by the regulation. Along with the extremely high efficiency of the devices, this applies to low standby loss of ≤ 0.09 W in particular. Choosing FOX today is an investment in the future, offering security tomorrow and beyond.

High performing, rugged, and simply capable.

Switchmode power supplies

MEDICAL

with interchangeable adapter system.
All products conform to IEC 60601-1.

Characteristics

- Efficiency level VI
- Overload protection
- Overvoltage protection
- Continuously short circuit proof

Technical data

Input voltage	100 – 240 V ± 10 %
Frequency	50 – 60 Hz
Input current	160 – 80 mA (FOX6-XM)
	250 mA (FOX12-XM)
Leakage current	≤ 10 µA (FOX6-XM)
	≤ 200 µA (FOX12-XM)
Output voltage tolerance	± 5 %
Turn-on delay	≤ 2 s
Stand-by	≤ 0.1 W
Efficiency (typ. full load)	≥ 80 % (FOX6-XM)
	≥ 83 % (FOX12-XM)
MTBF	200.000 h

Environmental specifications

Operating temperature	0 – 45° C
Humidity	10 – 95 %
Storage temperature	-40 – 70° C
Operating altitude	3000 m

Safety specifications

Standards	IEC 60601-1
Approvals	EU, USA, AUS, JPN
Safety class	II
EMC	EN 55022, EN 55024, EN 60601-1-2
Medical protection	2 x MOPP

Mechanical data

Dimensions	55.0 x 31.5 x 41.0 mm (FOX6-XM)
	75.0 x 31.5 x 41.0 mm (FOX12-XM)
Weight	112 g (FOX6-XM)
	127 g (FOX12-XM)
Connectors	AC input: Interchangeable primary adapter system
	DC output: Secondary adapter system

FOX6-XM

FW8002M

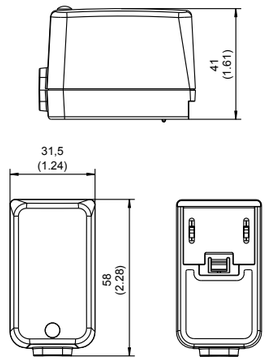

Alle Abmessungen in Millimeter (Inch), Abweichung ± 0,5 (0.02)
All Dimensions in Millimeter (Inch), Deviation ± 0,5 (0.02)

Output data			Worldwide
Voltage	Current	Ripple voltage	Article no.
5 V	1400 mA	180 mV pp	1898096
5.9 V	1200 mA	150 mV pp	1898097
7.5 V	950 mA	150 mV pp	1898098
9 V	770 mA	150 mV pp	1898099
12 V	600 mA	200 mV pp	1898100
15 V	480 mA	200 mV pp	1898101
18 V	400 mA	180 mV pp	1898102
24 V	300 mA	240 mV pp	1898103
48 V	150 mA	480 mV pp	1898105

FOX12-XM

FW8000M

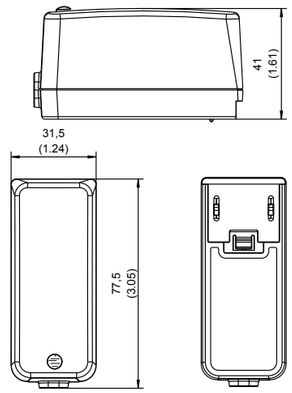

Alle Abmessungen in Millimeter (Inch), Abweichung ± 0,5 (0.02)
All Dimensions in Millimeter (Inch), Deviation ± 0,5 (0.02)

Output data			Worldwide
Voltage	Current	Ripple voltage	Article no.
5 V	2400 mA	100 mV pp	1898124
6 V	2000 mA	100 mV pp	1898125
7.5 V	1600 mA	100 mV pp	1898126
9 V	1300 mA	100 mV pp	1898127
12 V	1000 mA	100 mV pp	1898128
15 V	800 mA	100 mV pp	1898129
18 V	660 mA	100 mV pp	1898130
24 V	500 mA	100 mV pp	1898131
48 V	250 mA	150 mV pp	1898132

Please find adapters and accessories on page 82.
For notes on connection and safe operation, please refer to the operating instructions.

Switchmode power supplies

MEDICAL

with interchangeable adapter system.
All products conform to IEC 60601-1.

Characteristics

- Efficiency level VI
- Overload protection
- Overvoltage protection
- Continuously short circuit proof

Technical data

Input voltage	100 – 240 V ± 10 %
Frequency	50 – 60 Hz
Input current	400 – 200 mA (FOX18-XM)
	600 – 300 mA (FOX30-XM)
Leakage current	≤ 10 µA
Output voltage tolerance	± 5 %
Turn-on delay	≤ 1 s (FOX18-XM)
	≤ 2 s (FOX30-XM)
Stand-by	≤ 0.1 W
Efficiency (typ. full load)	≥ 86 % (FOX18-XM)
	≥ 87 % (FOX30-XM)
MTBF	200.000 h

Environmental specifications

Operating temperature	0 – 50° C (FOX18-XM)
	0 – 45° C (FOX30-XM)
Humidity	10 – 95 %
Storage temperature	-40 – 70° C
Operating altitude	3000 m

Safety specifications

Standards	IEC 60601-1
Approvals	EU, USA, AUS, JPN
Safety class	II
EMC	EN 55022, EN 55024, EN 60601-1-2
Medical protection	2 x MOPP

Mechanical data

Dimensions	77.0 x 50.0 x 34.0 mm (FOX18-XM)
	90.0 x 55.0 x 34.0 mm (FOX30-XM)
Weight	157 g (FOX18-XM)
	187 g (FOX30-XM)
Connectors	AC input: Interchangeable primary adapter system
	DC output: Secondary adapter system

FOX18-XM

FW8001M

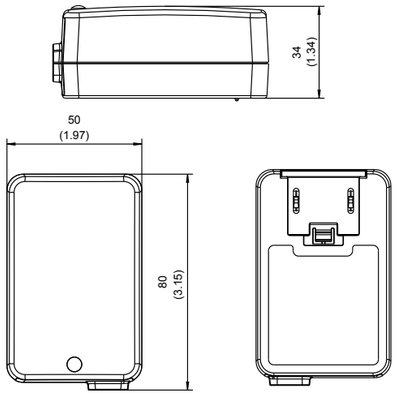

Alle Abmessungen in Millimeter (Inch), Abweichung ± 0,5 (0.02)
All Dimensions in Millimeter (Inch), Deviation ± 0,5 (0.02)

Output data			Worldwide
Voltage	Current	Ripple voltage	Article no.
5 V	3000 mA	150 mV pp	1898133
5.9 V	3000 mA	120 mV pp	1898134
7.5 V	2400 mA	120 mV pp	1898135
9 V	2000 mA	120 mV pp	1898136
12 V	1500 mA	120 mV pp	1898137
15 V	1200 mA	150 mV pp	1898138
18 V	1000 mA	180 mV pp	1898139
24 V	750 mA	180 mV pp	1898140
48 V	375 mA	200 mV pp	1898141

FOX30-XM

FW8030M

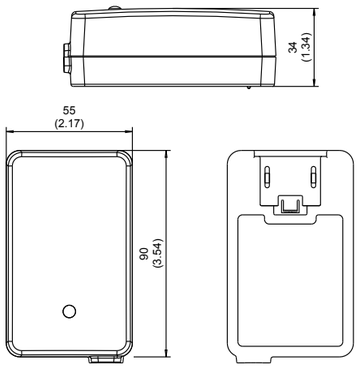

Alle Abmessungen in Millimeter (Inch), Abweichung ± 0,5 (0.02)
All Dimensions in Millimeter (Inch), Deviation ± 0,5 (0.02)

Output data			Worldwide
Voltage	Current	Ripple voltage	Article no.
5 V	5000 mA	150 mV pp	1898160
6 V	4200 mA	150 mV pp	1898161
7.5 V	4000 mA	150 mV pp	1898162
9 V	3300 mA	120 mV pp	1898163
12 V	2500 mA	120 mV pp	1898164
15 V	2000 mA	150 mV pp	1898165
18 V	1600 mA	200 mV pp	1898166
24 V	1250 mA	200 mV pp	1898167
48 V	625 mA	300 mV pp	1898168

Please find adapters and accessories on page 82.
For notes on connection and safe operation, please refer to the operating instructions.

Switchmode power supplies

MEDICAL

with interchangeable adapter system.
All products conform to IEC 60601-1.

Characteristics

- Efficiency level VI
- Overload protection
- Overvoltage protection
- Continuously short circuit proof

Technical data

Input voltage	100 – 240 V ± 10 %
Frequency	50 – 60 Hz
Input current	160 mA (FOX6-XM-USB) 250 mA (FOX12-XM-USB)
Leakage current	≤ 10 µA
Output voltage tolerance	± 5 %
Turn-on delay	≤ 2 s
Stand-by	≤ 0.1 W
Efficiency (typ. full load)	≥ 76 % (FOX6-XM-USB) ≥ 80 % (FOX12-XM-USB)
MTBF	200.000 h

Environmental specifications

Operating temperature	0 – 45° C
Humidity	10 – 95 %
Storage temperature	-40 – 70° C
Operating altitude	3000 m

Safety specifications

Standards	IEC 60601-1
Approvals	EU, USA, AUS, JPN
Safety class	II
EMC	EN 55022, EN 55024, EN 60601-1-2
Medical protection	2 x MOPP

Mechanical data

Dimensions	55.0 x 31.5 x 41.0 mm (FOX6-XM-USB) 75.0 x 31.5 x 41.0 mm (FOX12-XM-USB)
Weight	50 g (FOX6-XM-USB) 65 g (FOX12-XM-USB)
Connectors	AC input: Interchangeable primary adapter system DC output: USB socket type A

FOX6-XM-USB

FW8002/USB

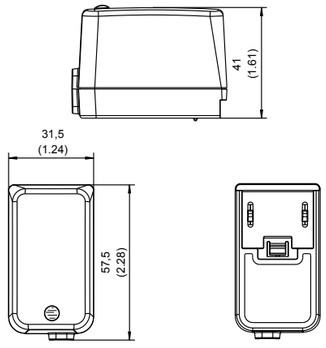

Alle Abmessungen in Millimeter (Inch), Abweichung ± 0,5 (0.02)
All Dimensions in Millimeter (Inch), Deviation ± 0,5 (0.02)

Output data			Worldwide
Voltage	Current	Ripple voltage	Article no.
5 V	**1400 mA**	**80 mV pp**	**1898349**

FOX12-XM-USB

FW8000M/USB

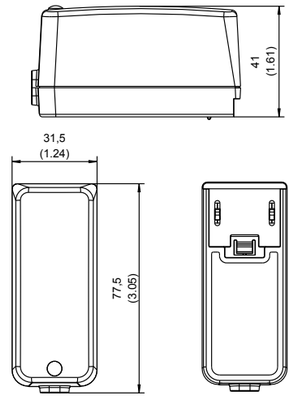

Alle Abmessungen in Millimeter (Inch), Abweichung ± 0,5 (0.02)
All Dimensions in Millimeter (Inch), deviation ± 0,5 (0.02)

Output data			Worldwide
Voltage	Current	Ripple voltage	Article no.
5 V	**2200 mA**	**150 mV pp**	**1898350**

Please find adapters and accessories on page 82.
For notes on connection and safe operation, please refer to the operating instructions.

Switchmode power supplies

MEDICAL

with fixed AC plug.
All products conform to IEC 60601-1.

Characteristics

- Efficiency level VI
- Overload protection
- Overvoltage protection
- Continuously short circuit proof

Technical data

Input voltage	100 – 240 V ± 10 %
Frequency	50 – 60 Hz
Input current	160 – 80 mA (FOX6-FM)
	300 – 150 mA (FOX12-FM)
Leakage current	≤ 10 µA
Output voltage tolerance	± 5 %
Turn-on delay	≤ 2 s
Stand-by	≤ 0.1 W
Efficiency (typ. full load)	≥ 80 % (FOX6-FM)
	≥ 83 % (FOX12-FM)
MTBF	200.000 h

Environmental specifications

Operating temperature	0 – 45° C
Humidity	10 – 95 %
Storage temperature	-40 – 70° C
Operating altitude	3000 m

Safety specifications

Standards	IEC 60601-1
Approvals	EU, USA, AUS, JPN
Safety class	II
EMC	EN 55022, EN 55024, EN 60601-1-2
Medical protection	2 x MOPP

Mechanical data

Dimensions	55.0 x 31.5 x 41.0 mm (FOX6-FM)
	75.0 x 31.5 x 41.0 mm (FOX12-FM)
Weight	114 g (FOX6-FM USA/Japan)
	119 g (FOX6-FM EURO)
	130 g (FOX12-FM USA/Japan)
	134 g (FOX12-FM AUS)
	135 g (FOX12-FM EURO)
	143 g (FOX12-FM UK)
Connectors	AC input: See article no.
	DC output: Secondary adapter system

FOX6-FM

FW8002M

available from May 2016

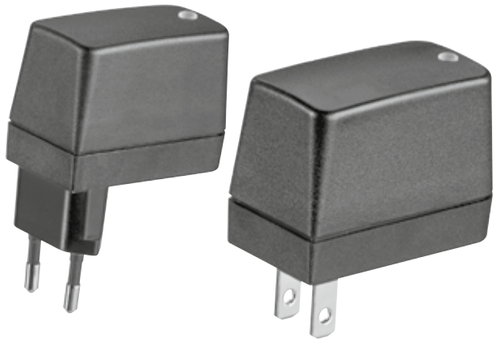

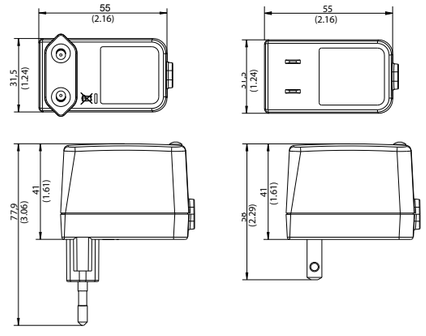

Alle Abmessungen in Millimeter (Inch), Abweichung ± 0,5 (0.02)
All Dimensions in Millimeter (Inch), Deviation ± 0,5 (0.02)

Output data			EURO	USA/Japan
Voltage	Current	Ripple voltage	Article no.	Article no.
5 V	1400 mA	180 mV pp	1898739	1898748
5.9 V	1200 mA	150 mV pp	1898740	1898749
7.5 V	950 mA	150 mV pp	1898741	1898750
9 V	770 mA	150 mV pp	1898742	1898751
12 V	600 mA	200 mV pp	1898743	1898752
15 V	480 mA	200 mV pp	1898744	1898753
18 V	400 mA	180 mV pp	1898745	1898754
24 V	300 mA	240 mV pp	1898746	1898755
48 V	150 mA	480 mV pp	1898747	1898756

FOX12-FM

FW8000M

available from May 2016

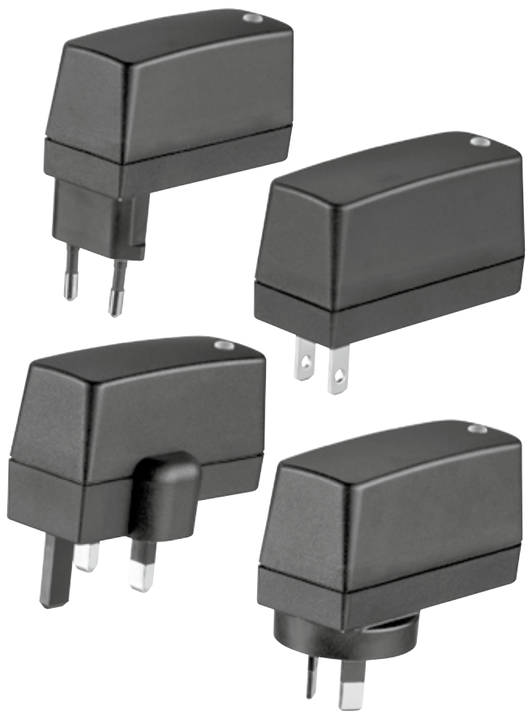

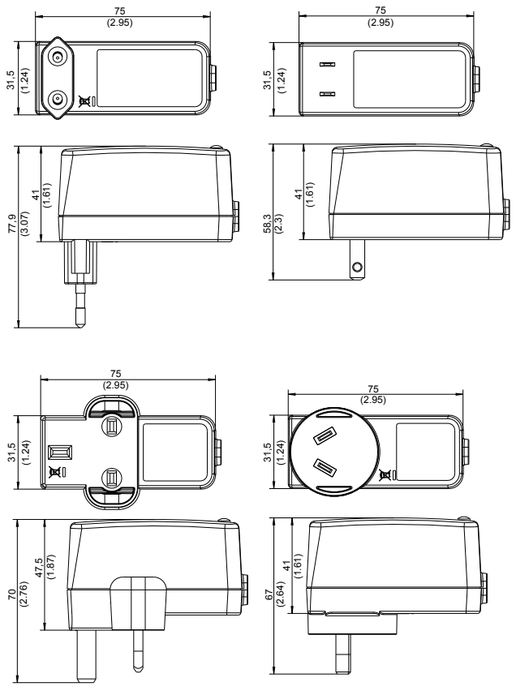

Alle Abmessungen in Millimeter (Inch), Abweichung ± 0,5 (0.02)
All Dimensions in Millimeter (Inch), Deviation ± 0,5 (0.02)

Output data			EURO	USA/Japan	UK	AUS
Voltage	Current	Ripple voltage	Article no.	Article no.	Article no.	Article no.
5 V	2400 mA	100 mV pp	1898776	1898785	1898849	1898858
6 V	2000 mA	100 mV pp	1898777	1898786	1898850	1898859
7.5 V	1600 mA	100 mV pp	1898778	1898787	1898851	1898860
9 V	1300 mA	100 mV pp	1898779	1898788	1898852	1898861
12 V	1000 mA	100 mV pp	1898780	1898789	1898853	1898862
15 V	800 mA	100 mV pp	1898781	1898790	1898854	1898863
18 V	660 mA	100 mV pp	1898782	1898791	1898855	1898864
24 V	500 mA	100 mV pp	1898783	1898792	1898856	1898865
48 V	250 mA	150 mV pp	1898784	1898793	1898857	1898866

Please find adapters and accessories on page 82.
For notes on connection and safe operation, please refer to the operating instructions.

Switchmode power supplies

MEDICAL

with fixed AC plug.
All products conform to IEC 60601-1.

Characteristics

- Efficiency level VI
- Overload protection
- Overvoltage protection
- Continuously short circuit proof

Technical data

Input voltage	100 – 240 V ± 10 %
Frequency	50 – 60 Hz
Input current	400 – 200 mA (FOX18-FM)
	600 – 300 mA (FOX30-FM)
Leakage current	≤ 10 µA
Output voltage tolerance	± 5 %
Turn-on delay	≤ 1 s (FOX18-FM)
	≤ 2 s (FOX30-FM)
Stand-by	≤ 0.1 W
Efficiency (typ. full load)	≥ 86 % (FOX18-FM)
	≥ 87 % (FOX30-FM)
MTBF	200.000 h

Environmental specifications

Operating temperature	0 – 50° C (FOX 18-FM)
	0 – 45° C (FOX 30-FM)
Humidity	10 – 95 %
Storage temperature	-40 – 70° C
Operating altitude	3000 m

Safety specifications

Standards	IEC 60601-1
Approvals	EU, USA, AUS, JPN
Safety class	II
EMC	EN 55022, EN 55024, EN 60601-1-2
Medical protection	2 x MOPP

Mechanical data

Dimensions	77.0 x 50.0 x 34.0 mm (FOX18-FM)
	90.0 x 55.0 x 34.0 mm (FOX30-FM)
Weight	164 g (FOX18-FM USA/Japan)
	166 g (FOX18-FM EURO)
	193 g (FOX30-FM USA/Japan)
	195 g (FOX30-FM EURO)
Connectors	AC input: See article no.
	DC output: Secondary adapter system

FOX18-FM

FW8001M **available from May 2016**

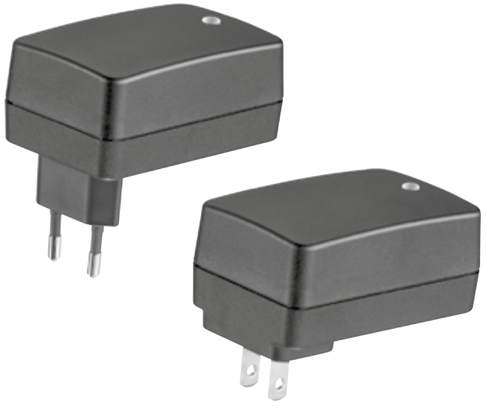

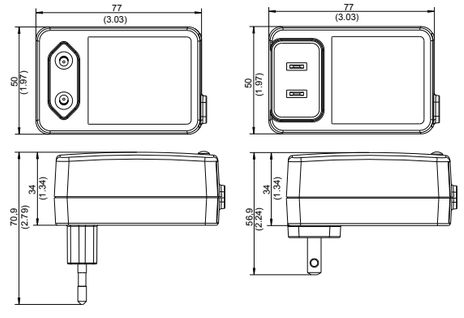

Alle Abmessungen in Millimeter (Inch), Abweichung ± 0,5 (0.02)
All Dimensions in Millimeter (Inch), Deviation ± 0,5 (0.02)

Output data			EURO	USA/Japan
Voltage	Current	Ripple voltage	Article no.	Article no.
5 V	3000 mA	150 mV pp	1898937	1898946
5.9 V	3000 mA	120 mV pp	1898938	1898947
7.5 V	2400 mA	120 mV pp	1898939	1898948
9 V	2000 mA	120 mV pp	1898940	1898949
12 V	1500 mA	120 mV pp	1898941	1898950
15 V	1200 mA	150 mV pp	1898942	1898951
18 V	1000 mA	180 mV pp	1898943	1898952
24 V	750 mA	180 mV pp	1898944	1898953
48 V	375 mA	200 mV pp	1898945	1898954

FOX30-FM

FW8030M **available from May 2016**

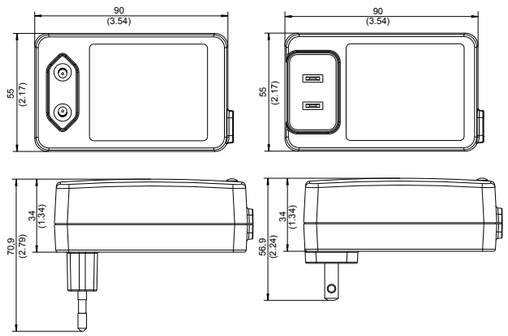

Alle Abmessungen in Millimeter (Inch), Abweichung ± 0,5 (0.02)
All Dimensions in Millimeter (Inch), Deviation ± 0,5 (0.02)

Output data			EURO	USA/Japan
Voltage	Current	Ripple voltage	Article no.	Article no.
5 V	5000 mA	150 mV pp	1898813	1898822
6 V	4200 mA	150 mV pp	1898814	1898823
7.5 V	4000 mA	150 mV pp	1898815	1898824
9 V	3300 mA	120 mV pp	1898816	1898825
12 V	2500 mA	120 mV pp	1898817	1898826
15 V	2000 mA	150 mV pp	1898818	1898827
18 V	1600 mA	200 mV pp	1898819	1898828
24 V	1250 mA	200 mV pp	1898820	1898829
48 V	625 mA	300 mV pp	1898821	1898830

Please find adapters and accessories on page 82.
For notes on connection and safe operation, please refer to the operating instructions.

Switchmode power supplies

MEDICAL

with fixed AC plug.
All products conform to IEC 60601-1.

Characteristics

- Efficiency level VI
- Overload protection
- Overvoltage protection
- Continuously short circuit proof

Technical data

Input voltage	100 – 240 V ± 10 %
Frequency	50 – 60 Hz
Input current	160 mA (FOX6-FM-USB)
	250 mA (FOX12-FM-USB)
Leakage current	≤ 10 µA
Output voltage tolerance	± 5 %
Turn-on delay	≤ 2 s
Stand-by	≤ 0.1 W
Efficiency (typ. full load)	≥ 76 % (FOX6-FM-USB)
	≥ 80 % (FOX12-FM-USB)
MTBF	200.000 h

Environmental specifications

Operating temperature	0 – 45° C
Humidity	10 – 95 %
Storage temperature	-40 – 70° C
Operating altitude	3000 m

Safety specifications

Standards	IEC 60601-1 (FOX6-FM-USB)
	IEC 60601-1-2 (FOX12-FM-USB)
Approvals	EU, USA, AUS, JPN
Safety class	II
EMC	EN 55022, EN 55024, EN 60601-1-2
Medical protection	2 x MOPP

Mechanical data

Dimensions	55.0 x 31.5 x 41.0 mm (FOX6-FM-USB)
	75.0 x 31.5 x 41.0 mm (FOX12-FM-USB)
Weight	52 g (FOX6-FM-USB USA/Japan)
	57 g (FOX6-FM-USB EURO)
	68 g (FOX12-FM-USB USA/Japan)
	72 g (FOX12-FM-USB AUS)
	73 g (FOX12-FM-USB EURO)
	81 g (FOX12-FM-USB UK)
Connectors	AC input: See article no.
	DC output: USB socket type A

FOX6-FM-USB

FW8002M/USB **available from May 2016**

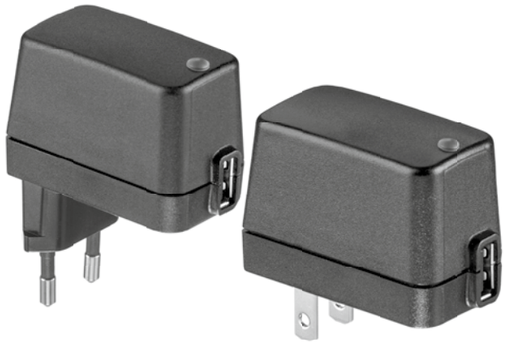

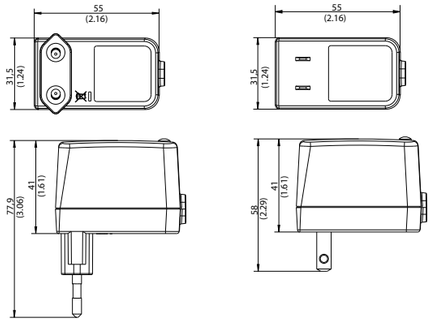

Alle Abmessungen in Millimeter (Inch), Abweichung ± 0,5 (0.02)
All Dimensions in Millimeter (Inch), Deviation ± 0,5 (0.02)

Output data			EURO	USA/Japan
Voltage	Current	Ripple voltage	Article no.	Article no.
5 V	**1400 mA**	**80 mV pp**	**1898869**	**1898870**

FOX12-FM-USB

FW8000M/USB **available from May 2016**

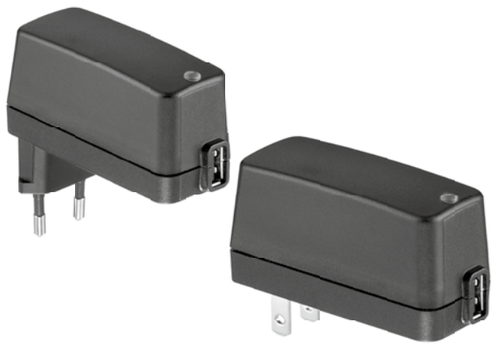

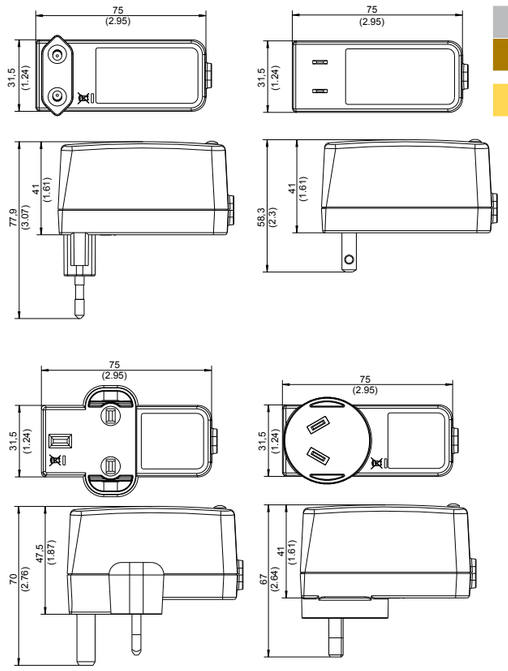

Alle Abmessungen in Millimeter (Inch), Abweichung ± 0,5 (0.02)
All Dimensions in Millimeter (Inch), Deviation ± 0,5 (0.02)

Output data			EURO	USA/Japan	UK	AUS
Voltage	Current	Ripple voltage	Article no.	Article no.	Article no.	Article no.
5 V	**2200 mA**	**80 mV pp**	**1898871**	**1898872**	**1898873**	**1898874**

Please find adapters and accessories on page 82.
For notes on connection and safe operation, please refer to the operating instructions.

Switchmode power supplies

MEDICAL

Desktop

All products conform to IEC 60601-1.

Characteristics

- Efficiency level VI
- Overload protection
- Overvoltage protection
- Continuously short circuit proof

Technical data

Input voltage	100 – 240 V
Frequency	50 – 60 Hz
Input current	600 – 300 mA (FOX30-DM) 1100 – 500 mA (DT50-M)
Leakage current	≤ 10 µA
Output voltage tolerance	± 5 %
Turn-on delay	≤ 2 s
Stand-by	≤ 0.1 W (FOX30-DM) ≤ 0.5 W (DT50-M)
Efficiency (typ. full load)	≥ 87 % (FOX30-DM) ≥ 90 % (DT50-M)
MTBF	200.000 h

Environmental specifications

Operating temperature	0 – 45° C
Humidity	10 – 95 %
Storage temperature	-40 – 70° C
Operating altitude	3000 m (FOX30-DM) 4000 m (DT50-M)

Safety specifications

Standards	IEC 60601-1
Approvals	EU, USA, AUS, JPN (FOX30-DM)
Safety class	II
EMC	EN 55022, EN 55024, EN 60601-1-2
Medical protection	2 x MOPP

Mechanical data

Dimensions	90.0 x 55.0 x 32.0 mm (FOX30-DM) 60.0 x 130.0 x 38.1 mm (DT50-M)
Weight	187 g (FOX30-DM) 295 g (DT50-M)
Connectors	AC input: 2 pole, IEC 60320-C8 socket DC output: Secondary adapter system

FOX30-DM

FW8030M/DT

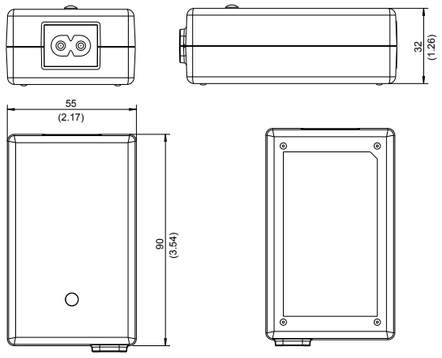

Alle Abmessungen in Millimeter (Inch), Abweichung ± 0,5 (0.02)
All Dimensions in Millimeter (Inch), Deviation ± 0,5 (0.02)

Output data			Worldwide
Voltage	Current	Ripple voltage	Article no.
5 V	5000 mA	150 mV pp	1898179
6 V	4200 mA	150 mV pp	1898180
7.5 V	4000 mA	150 mV pp	1898181
9 V	3300 mA	120 mV pp	1898182
12 V	2500 mA	120 mV pp	1898183
15 V	2000 mA	150 mV pp	1898184
18 V	1600 mA	200 mV pp	1898185
24 V	1250 mA	200 mV pp	1898186
48 V	625 mA	300 mV pp	1898187

DT50-M

FW7405M

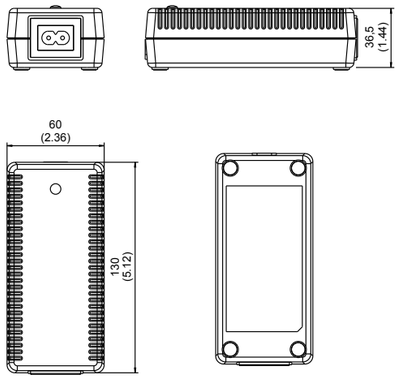

Alle Abmessungen in Millimeter (Inch), Abweichung ± 0,5 (0.02)
All Dimensions in Millimeter (Inch), Deviation ± 0,5 (0.02)

Output data			Worldwide
Voltage	Current	Ripple voltage	Article no.
5 V	5000 mA	120 mV pp	1890649
12 V	3800 mA	120 mV pp	1890650
15 V	3000 mA	120 mV pp	1890839
24 V	2200 mA	120 mV pp	1825898

Please find adapters and accessories on page 82.
For notes on connection and safe operation, please refer to the operating instructions.

Switchmode power supplies

MEDICAL

Desktop

All products conform to IEC 60601-1.

Characteristics

- Efficiency level VI
- Overload protection
- Overvoltage protection
- Continuously short circuit proof

Technical data

Input voltage	100 – 240 V
Frequency	50 – 60 Hz
Input current	1700 – 850 mA (DT80-M)
	2000 – 700 mA (DT150-M)
Leakage current	≤ 100 µA
Output voltage tolerance	± 5 %
Stand-by	≤ 0.5 W
Efficiency (typ. full load)	≥ 90%
MTBF	200.000 h

Environmental specifications

Operating temperature	0 – 40° C
Humidity	10 – 95 %
Storage temperature	-40 – 70° C
Operating altitude	3000 m

Safety specifications

Standards	IEC 60601-1
Approvals	EU, USA
Safety class	II
EMC	EN 60601-1
Medical protection	2 x MOPP

Mechanical data

Dimensions	79.0 x 149.0 x 50.0 mm (DT80-M)
	62.0 x 210.0 x 38.5 mm (DT150-M)
Weight	350 g (DT80-M)
	622 g (DT150-M)
Connectors	AC input: 2 pole, IEC 60320-C8 socket
	DC output: Secondary adapter system (DT80-M)
	Lead with coax connector 11.0 x 6.5 x 3.0 mm (DT150-M)

DT80-M

FW7488M

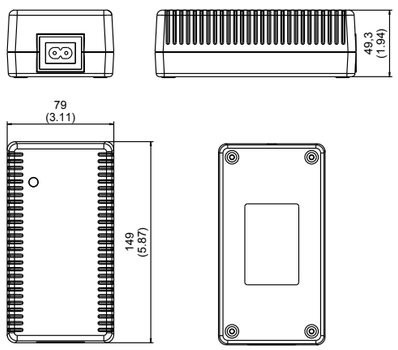

Alle Abmessungen in Millimeter (Inch), Abweichung ± 0,5 (0.02)
All Dimensions in Millimeter (Inch), Deviation ± 0,5 (0.02)

Output data			Worldwide
Voltage	Current	Ripple voltage	Article no.
12 V	5500 mA	120 mV pp	1890865
15 V	5000 mA	120 mV pp	1828339
24 V	3300 mA	120 mV pp	1890981

DT150-M

DT150M

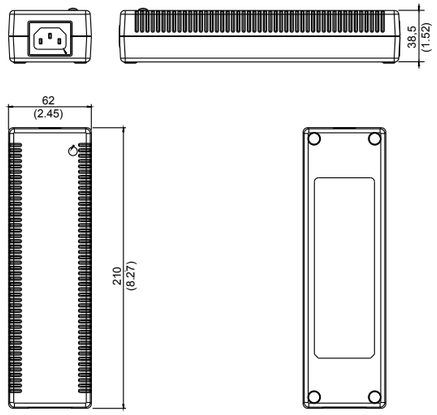

Alle Abmessungen in Millimeter (Inch), Abweichung ± 0,5 (0.02)
All Dimensions in Millimeter (Inch), Deviation ± 0,5 (0.02)

Output data			Worldwide
Voltage	Current	Ripple voltage	Article no.
24 V	6250 mA	240 mV pp	1893142

Please find adapters and accessories on page 82.
For notes on connection and safe operation, please refer to the operating instructions.

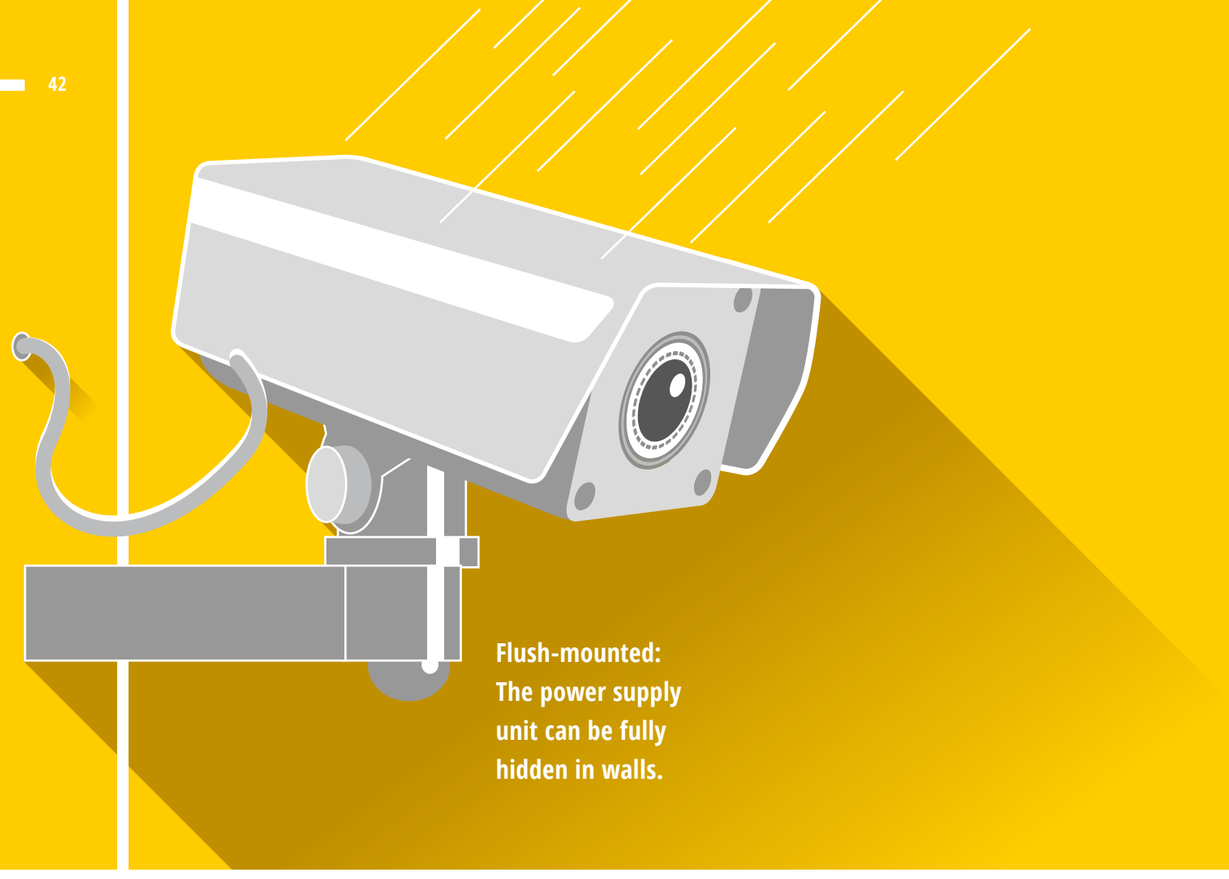

Flush-mounted: The power supply unit can be fully hidden in walls.

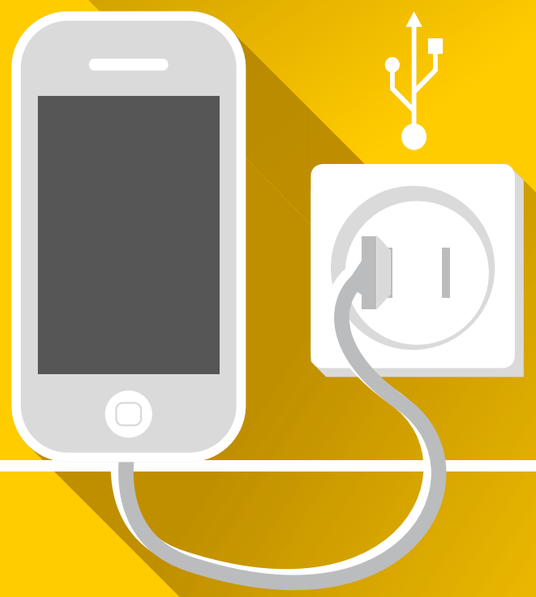

Flush-mounted

SEEING THE UNSEEN

The FRIWO flush-mounted range: Compact, highly efficient switch mode power supply units, with an optimum size for easy mounting. With a maximum diameter of just 51 mm, these units are ideal for installation in all standard flush-mounted sockets and can be fully hidden in walls. FRIWO's flush-mounted power supply units offer numerous advantages, from protection against vandalism to reduced cleaning in applications that require high levels of hygiene. This has made them a firm favorite for building technology, security and sanitary applications. Their cast housing means they are ideally suited for use in damp environments (protection class IP67).

Along with 6 W, 12 W and 18 W cast devices, the flush-mounted range includes the UP USB. This power supply unit features two USB interfaces in one standard socket, allowing you to charge a broad range of home and office devices directly from the wall, while reducing the need for additional chargers and annoying tangled cables.

All the devices in the UP range have a 90 to 264 V AC wide range input, making them suitable for use anywhere in the world. The devices are protection class II compliant, voltage controlled, current-limited and continuously short-circuit-proof, which means they offer a high level of operational safety combined with a long operational life. They also comply with the latest guidelines. Thanks to idle consumption of ≤ 300 mW and high efficiency at every power level, the units comply with the current threshold values of various energy efficiency programs, such as Energy Star, MEPS or ErP. Flush-mounted power supply units with custom outputs or special leads are also possible on request.

For easy installation and protection against vandalism.

Switchmode power supplies

FLUSH-MOUNTED

All products conform to IEC 60950.

Characteristics

- Overload protection
- Overvoltage protection
- Continuously short circuit proof

Technical data

Input voltage	100 – 240 V
Frequency	50 – 60 Hz
Input current	150 mA (UP6) 200 mA (UP USB) 400 mA (UP12, UP18)
Leakage current	≤ 10 µA (UP6) ≤ 25 µA (UP12, UP18) ≤ 90 µA (UP USB)
Output voltage tolerance	± 5 %
Efficiency (typ. full load)	≥ 80 %
MTBF	200.000 h

Environmental specifications

Operating temperature	0 – 40° C
Humidity	10 – 95 %
Storage temperature	-20 – 70° C

Safety specifications

Standards	IEC 60335-1, IEC 60950, IEC 61558 (UP6, UP12, UP18) IEC 60950 (UP USB)
Approvals	EU, US (UP6, UP12, UP18) EU (UP USB)
Safety class	II
EMC	EN 55011, EN 55022, EN 55024 (UP6, UP12, UP18) EN 55024, EN 55024 (UP USB)

Mechanical data

Dimensions	51.0 x 48.0 x 25.0 mm (UP6) 51.0 x 48.0 x 35.0 mm (UP12, UP18) 48.0 x 44.0 x 43.0 mm (UP USB)
Weight	95 g (UP6) 130 g (UP12, UP18) 70 g (UP USB)
Connectors	AC input: Leads 150 mm (UP6, UP12, UP18) Screw terminal 2 x 2.5 mm² (UP USB) DC output: Leads 150 mm (UP6, UP12, UP18) USB socket type A (UP USB)

For notes on connection and safe operation, please refer to the operating instructions.

UP6

FW7801

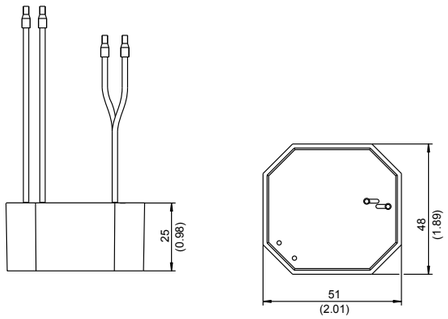

Alle Abmessungen in Millimeter (Inch), Abweichung ± 0,5 (0.02)
All Dimensions in Millimeter (Inch), Deviation ± 0,5 (0.02)

Output data			Worldwide
Voltage	Current	Ripple voltage	Article no.
4 V	1300 mA	300 mV pp	1891505
5 V	1200 mA	300 mV pp	1894388
6 V	1000 mA	300 mV pp	1891506
9 V	660 mA	300 mV pp	1891507
12 V	500 mA	300 mV pp	1891508
15 V	400 mA	300 mV pp	1891509
18 V	330 mA	300 mV pp	1891510
24 V	250 mA	300 mV pp	1891511

UP12 / UP18

FW7802 / FW7803

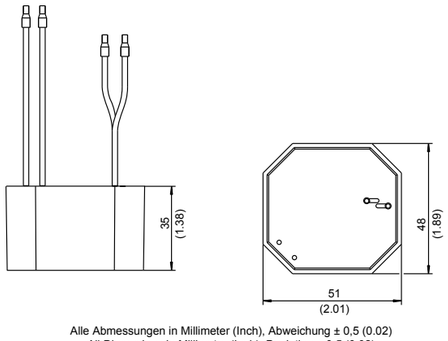

Alle Abmessungen in Millimeter (Inch), Abweichung ± 0,5 (0.02)
All Dimensions in Millimeter (Inch), Deviation ± 0,5 (0.02)

Output data UP12			Worldwide
Voltage	Current	Ripple voltage	Article no.
12 V	1000 mA	300 mV pp	1891767
24 V	500 mA	300 mV pp	1891768

Output data UP18			Worldwide
Voltage	Current	Ripple voltage	Article no.
12 V	1500 mA	400 mV pp	1832688
24 V	750 mA	400 mV pp	1891685

UP USB

FW7810

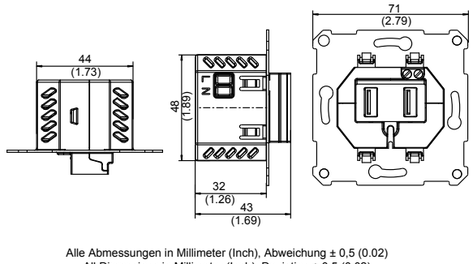

Alle Abmessungen in Millimeter (Inch), Abweichung ± 0,5 (0.02)
All Dimensions in Millimeter (Inch), Deviation ± 0,5 (0.02)

Output data			Worldwide
Voltage	Current	Ripple voltage	Article no.
5 V	2100 mA	80 mV pp	1897516
5 V	2100 mA	80 mV pp	1899027

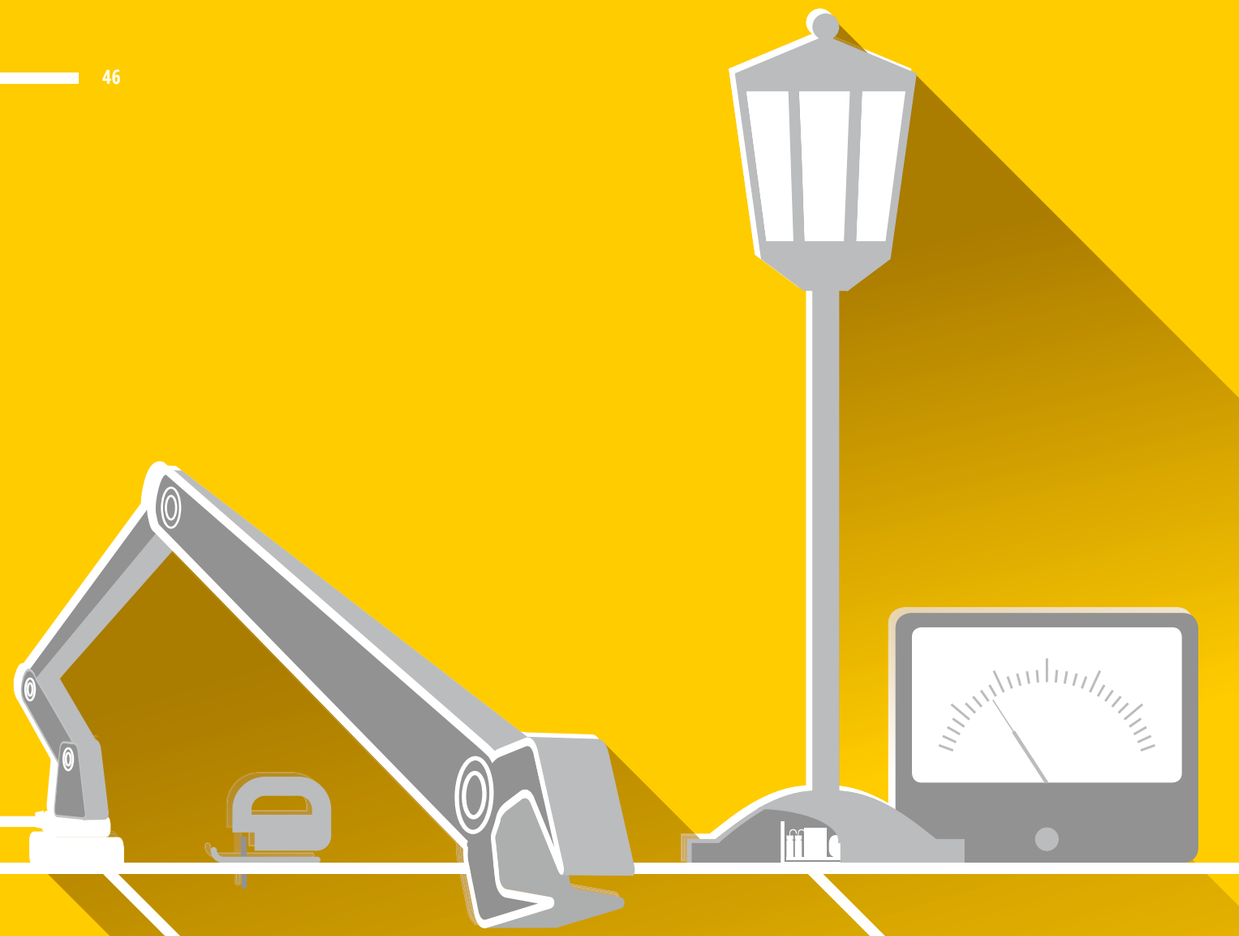

Open frame

TOP RATINGS, WORLDWIDE

The FRIWO OF product range: Compact, open-frame power supplies for the most demanding applications. Designed for maximum vibration, shock and temperature resistance, the incredible operating life of these devices sets new standards. Support also comes from their compact design, which dispenses with active fans. All the devices are purely convection cooled, which makes them far quieter in operation and avoids the need for a component that is prone to failure.

These highly efficient power supply units suffer almost no loss of power in standby mode, and the extremely low leakage current helps achieve maximum patient safety in medical technology applications as well as accurate readings in measurement applications, among numerous other advantages.

All the devices in the OF range have a 90 to 264 V AC wide-range input, making them suitable for global use. They are protection class I compliant, voltage controlled, current-limited and continuously short-circuit-proof. The OF250 and OF450 models feature an additional auxiliary output, which allows the application to be switched on and off easily, regardless of where the power supply unit is located. That offers more freedom in the design process and creates the potential for energy savings.

The open design of the product range makes the units extremely adaptable and allows for custom, made-to-measure solutions. Many of the devices in the standard portfolio are all-in-one solutions, certified for medical, household and IT applications.

Designed for maximum vibration, shock and temperature resistance.

No active fan – but still always cool.

Switchmode power supplies

OPEN FRAME

All products conform to IEC 60601-1, IEC 60950 and IEC 61558.

Characteristics

- Overload protection
- Overvoltage protection
- Continuously short circuit proof

Technical data

Input voltage	100 – 240 V
Frequency	50 – 60 Hz
Input current	1600 – 600 mA (OF65) 1800 – 800 mA (OF150)
Earth leakage current	≤ 500 µA
Touch current	≤ 100 µA
Ripple voltage	≤ 240 mV pp (OF65, OF150 24 V) ≤ 480 mV pp (OF150 12 V, OF150 48 V)
Output voltage tolerance	± 5 %
Stand-by	≤ 0.5 W
Efficiency (typ. full load)	≥ 87 %
MTBF	200.000 h

Environmental specifications

Operating temperature	-20 – 50° C (OF65) -20 – 70° C (OF150)
Humidity	95 % max.
Storage temperature	-20 – 85° C
Operating altitude	3000 m

Safety specifications

Standards	IEC 60601-1, IEC 60950, IEC 61558
Approvals	EU, US
Safety class	I
EMC	EN 55022, EN 55024, EN 60601-1-2

Mechanical data

Dimensions	101.8 x 51.2 x 25.0 mm (OF65) 127.0 x 75.4 x 35.0 mm (OF150 without U-bracket) 127.0 x 81.6 x 41.2 mm (OF150 with U-bracket)
Weight	120 g (OF65) 240 g (OF150 without U-bracket) 340 g (OF150 with U-bracket)

OF65

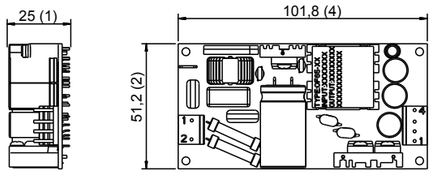

Alle Abmessungen in Millimeter (Inch), Abweichung ± 0,5 (0.02)
All Dimensions in Millimeter (Inch), Deviation ± 0,5 (0.02)

Output data		Worldwide
Voltage	Current	Article no.
12 V	**5400 mA**	**1897107**
15 V	**4300 mA**	**1899160**
24 V	**2700 mA**	**1897108**
48 V	**1350 mA**	**1897109**

* Approval: Q2 / 2016

OF150

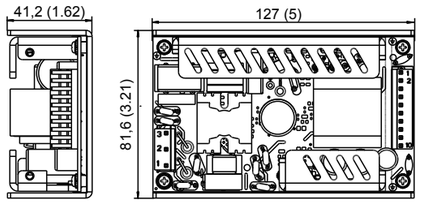

Alle Abmessungen in Millimeter (Inch), Abweichung ± 0,5 (0.02)
All Dimensions in Millimeter (Inch), Deviation ± 0,5 (0.02)

Output data		Worldwide
Voltage	Current	Article no.
12 V	**10500 mA**	**1893143**
also available without U-bracket		**1896246**
24 V	**6250 mA**	**1893247**
also available without U-bracket		**1891612**
48 V	**3125 mA**	**1893703**
also available without U-bracket		**1896248**

For notes on connection and safe operation, please refer to the operating instructions.

Switchmode power supplies

OPEN FRAME

All products conform to IEC 60601-1, IEC 60950 and IEC 61558.

Characteristics

- Overload protection
- Overvoltage protection
- Continuously short circuit proof

Technical data

Input voltage	100 – 240 V
Frequency	50 – 60 Hz
Input current	3500 – 1200 mA (OF250) 5500 – 2400 mA (OF450)
Earth leakage current	≤ 500 µA
Touch current	≤ 100 µA
Ripple voltage	≤ 250 mV pp (OF250) ≤ 240 mV pp (OF450)
Output voltage tolerance	± 5 %
Stand-by	≤ 0.5 W (OF450) ≤ 1.0 W (OF250)
Efficiency (typ. full load)	≥ 87 %
MTBF	200.000 h

Environmental specifications

Operating temperature	0 – 70° C (OF250) 0 – 50° C (OF450)
Humidity	95 % max. (OF250) 90 % max. (OF450)
Storage temperature	-20 – 70° C

Safety specifications

Standards	IEC 60601-1, IEC 60950, IEC 61558, IEC 60335-1 (OF 450)
Approvals	EU, US
Safety class	I
EMC	EN 55022, EN 55024, EN 60601-1-2

Mechanical data

Dimensions	155.0 x 101.0 x 40.0 mm (OF250) 185.0 x 122.0 x 48.0 mm (OF450)
Weight	600 g (OF250) 1250 g (OF450)

OF250

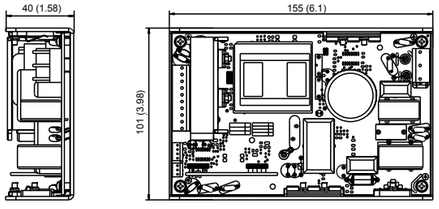

Alle Abmessungen in Millimeter (Inch), Abweichung ± 0,5 (0.02)
All Dimensions in Millimeter (Inch), Deviation ± 0,5 (0.02)

Output data		Worldwide
Voltage	Current	Article no.
5 V *	500 mA	1891705
24 V	10550 mA	

* Auxiliary voltage output

OF450

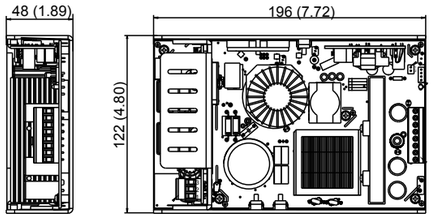

Alle Abmessungen in Millimeter (Inch), Abweichung ± 0,5 (0.02)
All Dimensions in Millimeter (Inch), Deviation ± 0,5 (0.02)

Output data		Worldwide
Voltage	Current	Article no.
5 V *	100 mA	1893710
24 V	18750 mA	

* Auxiliary voltage output

For notes on connection and safe operation, please refer to the operating instructions.

Chargers

FULL POWER, LOWER CONSUMPTION

High-quality charger technology from FRIWO: The ideal solution for mobile applications. Our standard portfolio includes extremely energy-efficient chargers for nickel and lithium battery technology, with minimal standby loss. Along with energy savings, our chargers have exceptional operational lives and offer outstanding levels of safety. All the devices are voltage controlled, current-limited and continuously short-circuit-proof. Products designed for use with lithium batteries feature charge and discharge monitoring, which effectively protects their sensitive cells.
A "one-stop shop" for charging and battery technology: Along with innovative chargers, FRIWO offers standard and custom battery solutions. Together they create optimally balanced systems. For an overview of our bundle solutions, see page XX of this catalog.

In addition to our portfolio of standard products, FRIWO offers extensive development expertise for custom solutions. Regardless of whether you require high or low performance, convection cooling, temperature monitoring, active battery balancing or communication via BUS systems, FRIWO's comprehensive experience and expertise in the field of charging technology will help you find the perfect solution for your specific needs.
As an innovative company, FRIWO is also constantly exploring new power supply concepts. In the field of contactless energy transmission, we have already realized efficient inductive charging systems with a 150 W power rating and parallel 1 Mbit/s half-duplex data transfer. Because they are dust-proof and waterproof, inductive charging concepts are ideally suited for medical applications and for use in particularly rough and challenging environments.

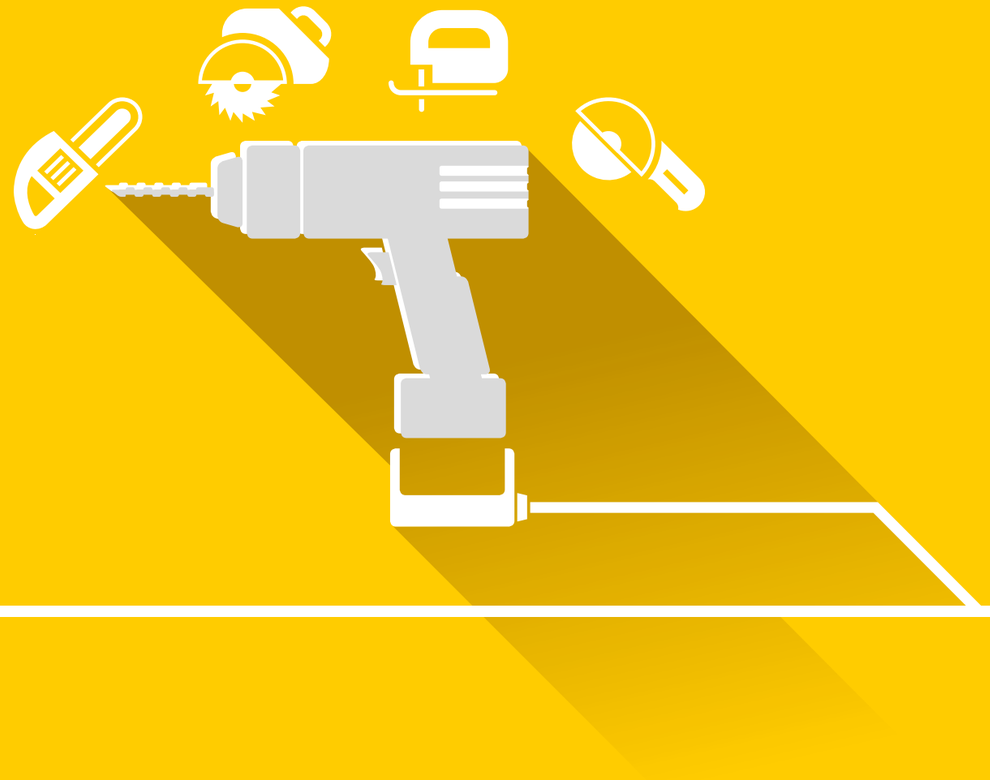

Innovative charging concepts for maximum mobility.

Development expertise from FRIWO: We always have our finger on the pulse.

Switchmode chargers

CHARGERS

for Lithium-Ion systems.
All products conform to IEC 60335.
GPP36 additionally conform to IEC 60601-1.

Characteristics

- Overload protection
- Overvoltage protection
- Continuously short circuit proof
- Reverse polarity protection
- Timer: 12 h
- Battery NTC sensor: R = 10 kR / B = 3977

Technical data

Input voltage	100 – 240 V
Frequency	50 – 60 Hz
Input current	200 – 400 mA (GPP18) 180 – 450 mA (GPP36)
Leakage current	≤ 100 µA
Output voltage tolerance	± 10 %
Turn-on delay	≤ 1
Stand-by	≤ 0.5 W (GPP18) ≤ 0.8 W (GPP36)
Efficiency (typ. full load))	≥ 75 %
MTBF	200.000 h

Environmental specifications

Operating temperature	0 – 40° C
Humidity	5 – 95 %
Storage temperature	-40 – 70° C
Operating altitude	2000 m

Safety specifications

Standards	IEC 60335-2-29, IEC 60601-1 (GPP36), UL 1310,
Safety class	II
EMC	EN 55014 , EN 55022, EN 61000

Mechanical data

Dimensions	52.0 x 85.0 x 39.5 mm (GPP18) 69.0 x 109.0 x 45.4 mm (GPP36)
Weight	200 g (GPP18) 260 g (GPP36 7S) 320 g (GPP36)
Connectors	AC input: Interchangeable primary adapter system DC output: Secondary adapter system

Li-Ion GPP18

FW 7290

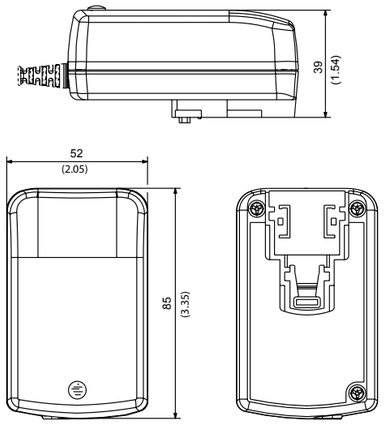

Alle Abmessungen in Millimeter (Inch), Abweichung ± 0,5 (0.02)
All Dimensions in Millimeter (Inch), Deviation ± 0,5 (0.02)

Output data			Worldwide
Cells	Voltage	Current	Article no.
1	4.2 V	3000 mA	1832657
2	8.4 V	1500 mA	1832658

Li-Ion GPP36

FW 7300 / FW 7310 (GPP36 7S)

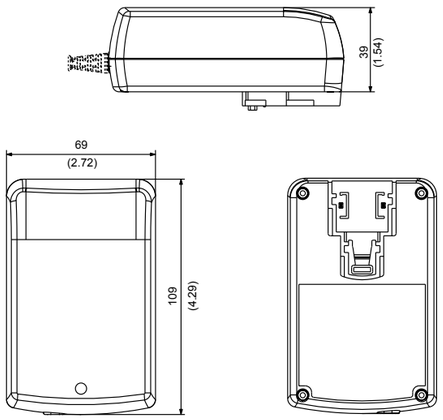

Alle Abmessungen in Millimeter (Inch), Abweichung ± 0,5 (0.02)
All Dimensions in Millimeter (Inch), Deviation ± 0,5 (0.02)

Output data			Worldwide
Cells	Voltage	Current	Article no.
1	4.2 V	4000 mA	1834050
2	8.4 V	3500 mA	1834051
3	12.6 V	2500 mA	1834052
4	16.8 V	2000 mA	1834053
5	21 V	1600 mA	1834054
7	29.4 V	1350 mA	1893768

* except GPP36 7S

Please find adapters and accessories on page 82.
For notes on connection and safe operation, please refer to the operating instructions.

Switchmode chargers

CHARGERS

for Lithium-Ion systems.
All products conform to IEC 60335.

Characteristics

- Overload protection
- Overvoltage protection
- Continuously short circuit proof
- Reverse polarity protection
- Timer: 12 h (Li-Ion FOX50-C and Li-Ion FOX90-C), 6 h (Li-Ion FOX160-C)
- Battery NTC sensor: R = 10 kR / B = 3977

Technical data

Input voltage	100 – 240 V
Frequency	50 – 60 Hz
Input current	1100 – 550 mA (Article no. 1897025, 1898549, 1897026) 1840 – 850 mA (Article no. 1897114, 1897115) 1850 – 870 mA (Article no. 1897113) 2200 mA (Article no. 1897215)
Leakage current	≤ 100 µA (FOX50-C and FOX90-C) ≤ 250 µA (FOX160-C)
Reverse current	50 µA (FOX50-C and FOX90-C) 100 µA (FOX160-C)
Output voltage tolerance	± 1 %
Turn-on delay	≤ 5 s
Stand-by	≤ 0.5 W
Efficiency (typ. full load)	≥ 80 %
MTBF	200.000 h

Environmental specifications

Operating temperature	0 – 40° C
Humidity	10 – 85 %
Storage temperature	-20 – 70° C
Operating altitude	2000 m

Safety specifications

Standards	EN 60335-1, EN 60335-2-29, UL 1310 (FOX50-C, FOX90-C) EN 60335-1, EN 60335-2-29, UL 1012 (FOX160-C)
Safety class	II
EMC	EN 55011, EN 55014, EN 60601-2-1, FCC15B (FOX50-C and Article no. 1897113) EN 55011, 55014, 60601-1-4 (FOX90-C) EN 55014 (FOX160-C)

Mechanical data

Dimensions	179.0 x 86.0 x 50.5 mm
Weight	470 g (FOX50-C) 507 g (FOX90-C, FOX160-C)
Connectors	AC input: 2 pole, IEC 60320-C8 socket DC output: 3 pole, JST connector

Li-Ion FOX50-C FW 8101

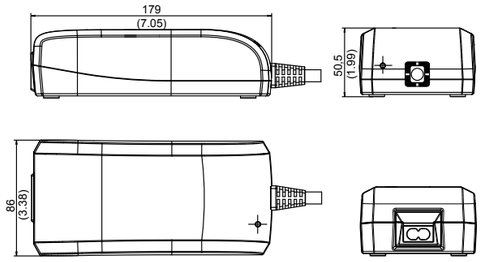

Alle Abmessungen in Millimeter (Inch), Abweichung ± 0,5 (0.02)
All Dimensions in Millimeter (Inch), Deviation ± 0,5 (0.02)

Output data				
Cells	Voltage	Current	End-of-charge voltage	Article no.
4	14.4 V	3000 mA	16.8 V	1897025
7	25.2 V	1700 mA	29.4 V	1897026
8	18.8 V	1500 mA	33.6 V	1898549

Li-Ion FOX90-C FW 8100

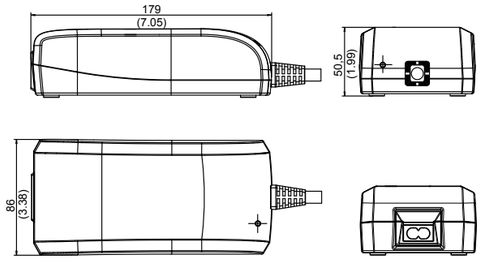

Alle Abmessungen in Millimeter (Inch), Abweichung ± 0,5 (0.02)
All Dimensions in Millimeter (Inch), Deviation ± 0,5 (0.02)

Output data				
Cells	Voltage	Current	End-of-charge voltage	Article no.
7	25.2 V	3000 mA	29.4 V	1897113
8	28.8 V	2600 mA	33.6 V	1897114
10	36 V	2100 mA	42 V	1897115

Li-Ion FOX160-C FW 8102

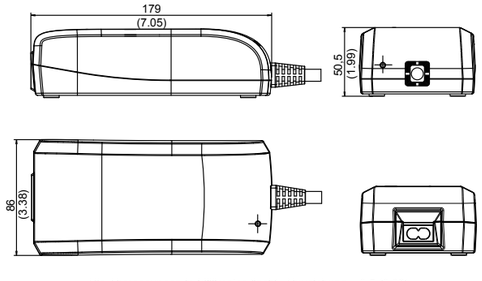

Alle Abmessungen in Millimeter (Inch), Abweichung ± 0,5 (0.02)
All Dimensions in Millimeter (Inch), Deviation ± 0,5 (0.02)

Output data				
Cells	Voltage	Current	End-of-charge voltage	Article no.
10	36 V	4000 mA	42 V	1897215

For notes on connection and safe operation, please refer to the operating instructions.

Switchmode chargers

CHARGERS

for Lithium-Iron Phosphate systems.
All products conform to IEC 60335.
GPP36 additionally conform to IEC 60601-1.

Characteristics

- Overload protection
- Overvoltage protection
- Continuously short circuit proof
- Reverse polarity protection
- Timer: 12 h
- Battery NTC sensor: R = 10 kR / B = 3977

Technical data

Input voltage	100 – 240 V
Frequency	50 – 60 Hz
Input current	200 – 400 mA (GPP18) 180 – 450 mA (GPP36)
Leakage current	≤ 100 µA
Output voltage tolerance	± 10 %
Turn-on delay	≤ 1 s
Stand-by	≤ 0.5 W (GPP18) ≤ 0.8 W (GPP36)
Efficiency (typ. full load)	≥ 75 %
MTBF	200.000 h

Environmental specifications

Operating temperature	0 – 40° C
Humidity	5 – 95 %
Storage temperature	-40 – 70° C
Operating altitude	2000 m

Safety specifications

Standards	IEC 60335-2-29, IEC 60601-1 (GPP36), UL 1310
Safety class	II
EMC	EN 55014, EN 55022, EN 61000, EN 60601

Mechanical data

Dimensions	52.0 x 85.0 x 39.5 mm (GPP18) 69.0 x 109.0 x 45.5 mm (GPP36)
Weight	200 g (GPP18) 320 g (GPP36)
Connectors	AC input: Interchangeable primary adapter system DC output: Secondary adapter system

LiFePO4 GPP18

FW 7290

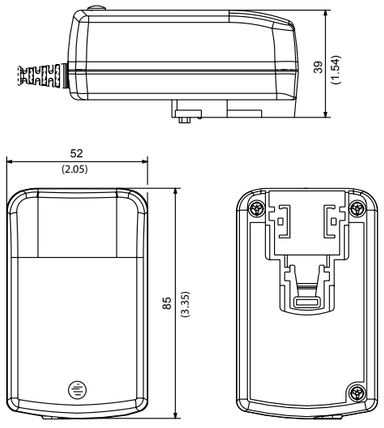

Alle Abmessungen in Millimeter (Inch), Abweichung ± 0,5 (0.02)
All Dimensions in Millimeter (Inch), Deviation ± 0,5 (0.02)

Output data			Worldwide
Cells	Voltage	Current	Article no.
1	3.6 V	3000 mA	1832654
2	7.2 V	1500 mA	1832655

LiFePO4 GPP36

FW 7300

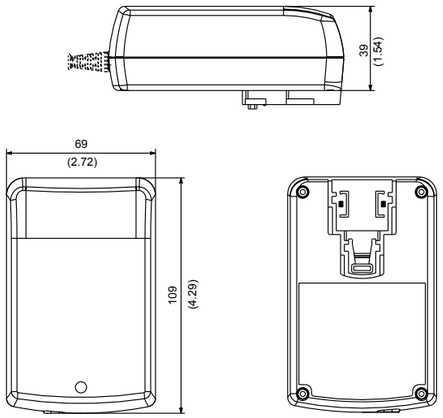

Alle Abmessungen in Millimeter (Inch), Abweichung ± 0,5 (0.02)
All Dimensions in Millimeter (Inch), Deviation ± 0,5 (0.02)

Output data			Worldwide
Cells	Voltage	Current	Article no.
1	3.6 V	4000 mA	1834055
2	7.2 V	3500 mA	1834056
3	10.8 V	2500 mA	1834057
4	14.4 V	2000 mA	1834058
5	18 V	1600 mA	1834059

Please find adapters and accessories on page 82.
For notes on connection and safe operation, please refer to the operating instructions.

Switchmode chargers

CHARGERS

for Nickel-Cadmium-, Nickel-Metal Hydride- and Lead-Acid systems.
All products conform to IEC 60335.

Characteristics

- Overload protection
- Overvoltage protection
- Continuously short circuit proof
- Reverse polarity protection (GPP18 and GPP36)
- Timer: 12 h
- Battery NTC sensor: R = 10 kR / B = 3977 (GPP18 and GPP36)

Technical data

Input voltage	100 – 240 V
Frequency	50 – 60 Hz
Input current	200 – 400 mA (GPP18) 180 – 450 mA (GPP36) 130 – 200 mA (PP8)
Leakage current	≤ 100 µA (GPP18, GPP36) ≤ 10 µA (PP8)
Output voltage tolerance	± 10 %
Turn-on delay	≤ 1 s
Stand-by	≤ 0.5 W (GPP18, PP8) ≤ 0.8 W (GPP36)
Efficiency (typ. full load)	≥ 75 %
MTBF	100.000 h (GPP18, GPP36) 200.000 h (PP8)

Environmental specifications

Operating temperature	0 – 40° C
Humidity	5 – 95 %
Storage temperature	-40 – 70° C
Operating altitude	2000 m

Safety specifications

Standards	UL 1310, IEC 60335-2-29 (GPP18, GPP36) IEC 60335-2-29 (PP8)
Safety class	II
EMC	EN 55014, EN 55022, EN 61000, EN 60601 (GPP18, GPP36)

Mechanical data

Dimensions	52.0 x 85.0 x 39.5 mm (GPP18) 69.0 x 109.0 x 45.5 mm (GPP36) 29.0 x 74.0 x 79.0 mm (PP8)
Weight	125 g (PP8) 200 g (GPP18) 320 g (GPP36)
Connectors	AC input: GPP18 and GPP36: Interchangeable primary adapter system PP8: See article no. DC output: Secondary adapter system

Please find adapters and accessories on page 82.
For notes on connection and safe operation, please refer to the operating instructions.

NiCd/NiMH GPP18

FW 7290

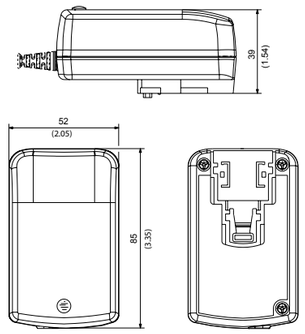

Output data				Worldwide
Cells	Capacity	Voltage	Current	Article no.
2 - 6	1 - 35 Ah	2.4 - 7.2 V	1500 - 3000 mA	1832656

Alle Abmessungen in Millimeter (Inch), Abweichung ± 0,5 (0.02)
All Dimensions in Millimeter (Inch), Deviation ± 0,5 (0.02)

NiCd/NiMH GPP36

FW 7300

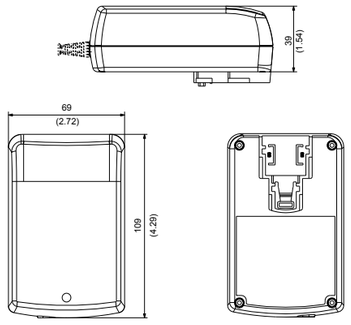

Output data				Worldwide
Cells	Capacity	Voltage	Current	Article no.
2 - 12	1 - 35 Ah	2.4 - 14.4 V	1600 - 4000 mA	1834049

Alle Abmessungen in Millimeter (Inch), Abweichung ± 0,5 (0.02)
All Dimensions in Millimeter (Inch), Deviation ± 0,5 (0.02)

Pb PP8

FW 7118

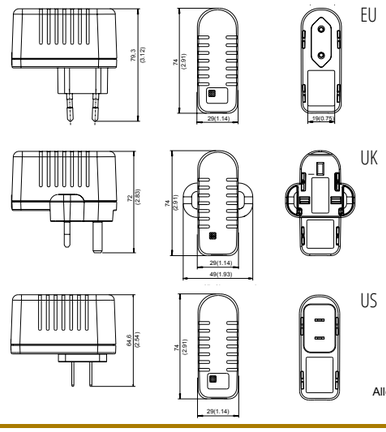

Output data				
Cells	Voltage	Current	Connector	Article no.
3	6 V	900 mA	EU	1890125
3	6 V	900 mA	UK	1824106
3	6 V	900 mA	US	1824107
6	12 V	500 mA	EU	1824396
6	12 V	500 mA	US	1825090

Alle Abmessungen in Millimeter (Inch), Abweichung ± 0,5 (0,02)
All Dimensions in Millimeter (Inch), deviation ± 0,5 (0,02)

Battery packs and chargers

BUNDLE MATRIX

An overview of our system solutions from a single source

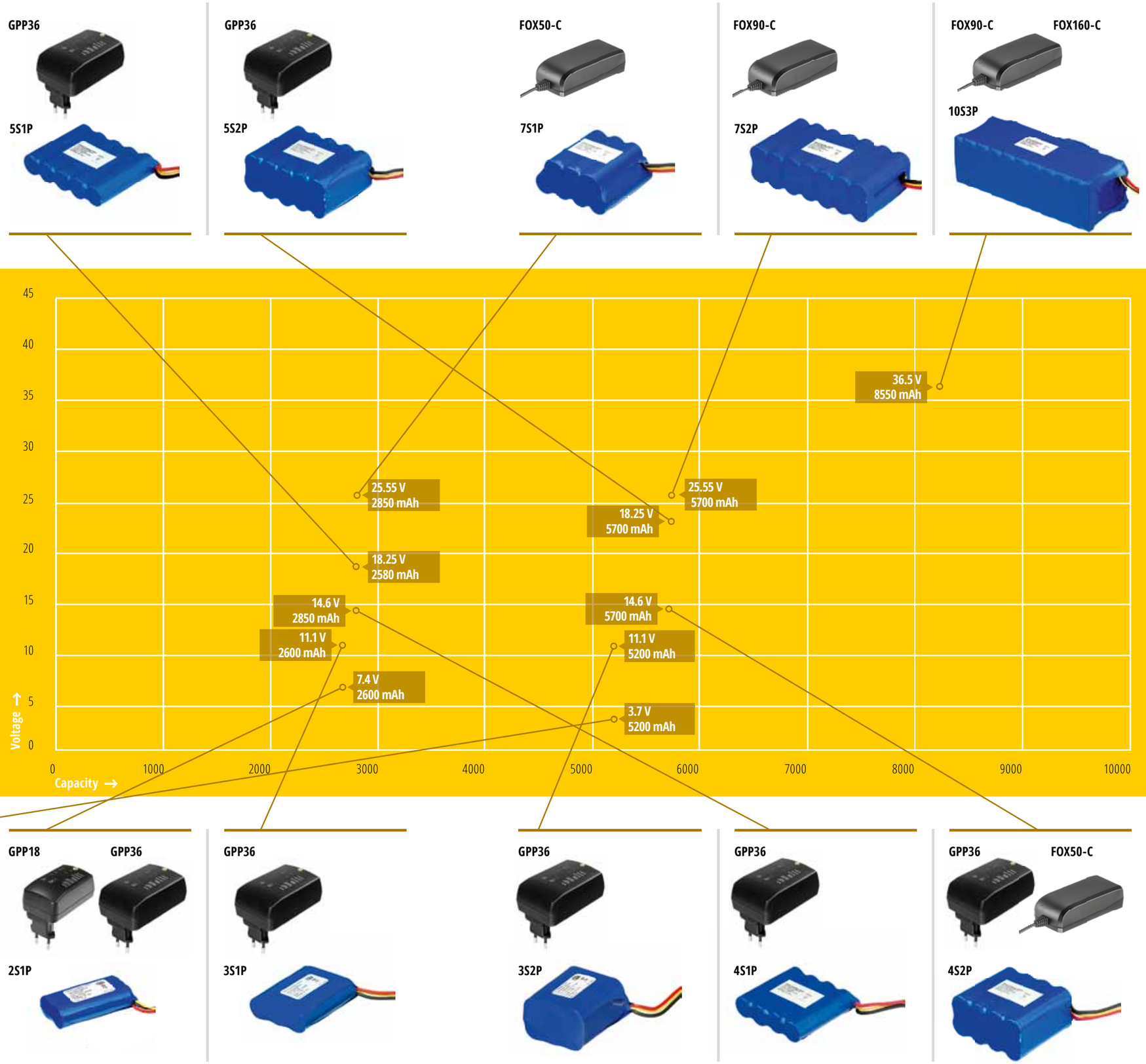

Battery packs

SOLUTIONS FROM A SINGLE SOURCE

As a system supplier, FRIWO offers both chargers and battery packs. In addition to our range of standard solutions, we can design and manufacture custom solutions for stationary and mobile applications. And they all carry the "Made in Germany" label.

FRIWO's standard portfolio uses premium cells. Our battery packs are equipped with an appropriate protective circuit, which monitors the charging and discharging process, reducing the stress on cells and significantly extending the life of the pack. FRIWO also offers solutions with active cell balancing, to ensure maximum use of capacity. Combined with FRIWO chargers, this results in an optimally balanced overall system. For an overview of our bundle solutions from the standard portfolio, see page 62/63 of this catalog.

FRIWO offers extensive development expertise for custom solutions. This allows the company to work closely with customers to create application-specific battery packs using cells from various manufacturers. Along with the optimum configuration of cells, we are capable of implementing complex battery management systems (BMS) including a range of communication systems and parameter queries. Among other things, this makes it possible to indicate the "health" of a battery pack or its charge status, or to implement cell authentication. Along with the capacity to develop and manufacture custom solutions, FRIWO has an internal licensing department, which works closely with the relevant authorities to secure the necessary official approvals.

An optimally balanced overall system ...

Made in Germany.

Battery solutions

BATTERY PACKS

Lithium-Ion technology.
All products conform to transport standard UN38.3.

Technical data

Cell type	ICR18650-26F M
Charge voltage	4.2 V (1S2P), 8.4 V (2S1P), 12.6 V (3S1P, 3S2P)
Charge current	1300 mA (2S1P, 3S1P), 2600 mA (1S2P, 3S2P)
Max. charge current	2600 mA (2S1P, 3S1P), 5200 mA (1S2P, 3S2P)
Discharge current (cont.)	2600 mA (2S1P, 3S1P), 5200 mA (1S2P, 3S2P)
Discharge voltage	2.75 V (1S2P), 5.5 V (2S1P), 8.25 V (3S1P, 3S2P)
NTC	10 K
Cell balancing	3S1P

Safety specifications

Standards	IEC62133 (2S1P, 3S1P, 3S2P), UN38.3

Mechanical data

Dimensions	39.0 x 20.0 x 73.0 mm (1S2P, 2S1P), 57.0 x 20.0 x 73.0 mm (3S1P), 57.0 x 39.0 x 74.0 mm (3S2P)
Weight	104 g (Article no. 5500088, 5500130), 108 g (Article no. 5500001, 5500129), 152 g (Article no. 5500089), 156 g (Article no. 5500002), 299 g (Article no. 5500090), 303 g (Article no. 5500003)
Cable length	200 mm
Connector	JST J300 (Article no. 5500001, 5500002, 5500003, 5500129)

1S2P / 2S1P

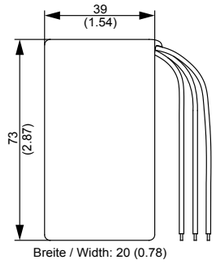

Alle Abmessungen in Millimeter (Inch), Abweichung ± 0,5 (0.02)
All Dimensions in Millimeter (Inch), Deviation ± 0,5 (0.02)

Battery pack 1S2P			
Nominal voltage	Capacity	Connector	Article no.
3.7 V	5200 mAh	JST connector: PIN 1 GND black, PIN 2 NTC yellow, PIN 3 POSITIVE red	5500129
3.7 V	5200 mAh	Wires: GND black, NTC yellow, POSITIVE red	5500130

Battery pack 2S1P			
Nominal voltage	Capacity	Connector	Article no.
7.4 V	2600 mAh	JST connector: PIN 1 GND black, PIN 2 NTC yellow, PIN 3 POSITIVE red	5500001
7.4 V	2600 mAh	Wires: GND black, NTC yellow, POSITIVE red	5500088

3S1P

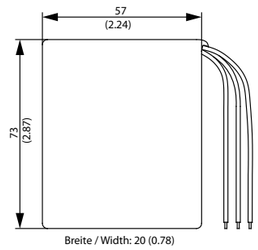

Alle Abmessungen in Millimeter (Inch), Abweichung ± 0,5 (0.02)
All Dimensions in Millimeter (Inch), Deviation ± 0,5 (0.02)

Battery pack 3S1P			
Nominal voltage	Capacity	Connector	Article no.
11.1 V	2600 mAh	JST connector: PIN 1 GND black, PIN 2 NTC yellow, PIN 3 POSITIVE red	5500002
11.1 V	2600 mAh	Wires: GND black, NTC yellow, POSITIVE red	5500089

3S2P

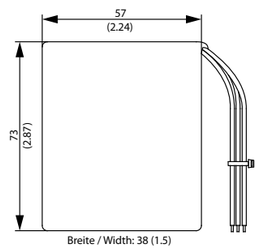

Alle Abmessungen in Millimeter (Inch), Abweichung ± 0,5 (0.02)
All Dimensions in Millimeter (Inch), Deviation ± 0,5 (0.02)

Battery pack 3S2P			
Nominal voltage	Capacity	Connector	Article no.
11.1 V	5200 mAh	JST connector: PIN 1 GND black, PIN 2 NTC yellow, PIN 3 POSITIVE red	5500003
11.1 V	5200 mAh	Wires: GND black, NTC yellow, POSITIVE red	5500090

For notes on connection and safe operation, please refer to the operating instructions.

Battery solutions

BATTERY PACKS

Lithium-Ion technology.
All products conform to transport standard UN38.3.

Technical data

Cell type	INR18650-29E
Charge voltage	16.8 V (4S1P, 4S2P), 21.0 V (5S1P, 5S2P)
Charge current	1375 mA (4S1P, 5S1P), 2750 mA (4S2P, 5S2P)
Max. charge current	2750 mA (4S1P, 4S2P, 5S1P), 5500 mA (5S2P)
Discharge current (cont.)	2750 mA (4S1P, 4S2P, 5S1P), 5500 mA (5S2P)
Discharge voltage	10.0 V (4S1P, 4S2P), 12.5 V (5S1P, 5S2P)
NTC	10 K, B = 3380 (4S1P, 4S2P, 5S1P), 10 K, B = 3988 (5S2P)
Cell balancing	4S1P, 4S2P, 5S1P, 5S2P

Safety specifications

Standards	IEC62133 (5S1P, 5S2P), UN38.3

Mechanical data

Dimensions	76.0 x 19.0 x 75.0 mm (4S1P), 76.0 x 38.0 x 75.0 mm (4S2P), 95.0 x 19.0 x 75.0 mm (5S1P), 95.0 x 38.0 x 75.0 mm (5S2P)
Weight	242 g (Article no. 5500099), 248 g (Article no. 5500091), 252 g (Article no. 5500004), 434 g (Article no. 5500100), 528 g (Article no. 5500092), 534 g (Article no. 5500005)
Cable length	200 mm
Connector	JST J300 (Article no. 5500004, 5500005, 5500099, 5500100)

4S1P

with SMBus interface

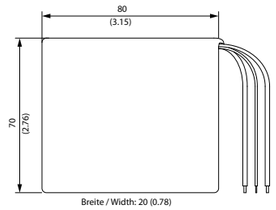

Alle Abmessungen in Millimeter (Inch), Abweichung ± 0,5 (0.02)
All Dimensions in Millimeter (Inch), Deviation ± 0,5 (0.02)

Battery pack 4S1P			
Nominal voltage	Charge current	Connector	Article no.
14.6 V	**2850 mAh**	**on request**	**5500099**

4S2P

with SMBus interface

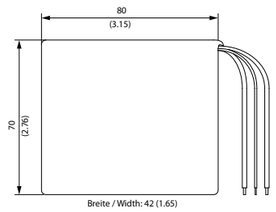

Alle Abmessungen in Millimeter (Inch), Abweichung ± 0,5 (0.02)
All Dimensions in Millimeter (Inch), Deviation ± 0,5 (0.02)

Battery pack 4S2P			
Nominal voltage	Charge current	Connector	Article no.
14.6 V	**5700 mAh**	**on request**	**5500100**

5S1P

optionally with SMBus interface

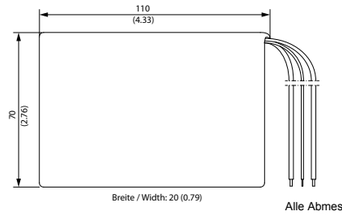

Alle Abmessungen in Millimeter (Inch), Abweichung ± 0,5 (0.02)
All Dimensions in Millimeter (Inch), Deviation ± 0,5 (0.02)

Battery pack 5S1P			
Nominal voltage	Charge current	Connector	Article no.
18.25 V	**2850 mAh**	**JST connector: PIN 1 GND black, PIN 2 NTC yellow, PIN 3 POSITIVE red**	**5500004**
18.25 V	**2850 mAh**	**Wires: GND black, NTC yellow, POSITIVE red**	**5500091**

5S2P

optionally with SMBus interface

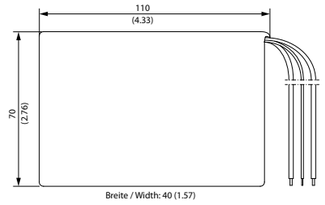

Alle Abmessungen in Millimeter (Inch), Abweichung ± 0,5 (0.02)
All Dimensions in Millimeter (Inch), Deviation ± 0,5 (0.02)

Battery pack 5S2P			
Nominal voltage	Charge current	Connector	Article no.
18.25 V	**5700 mAh**	**JST connector: PIN 1 GND black, PIN 2 NTC yellow, PIN 3 POSITIVE red**	**5500005**
18.25 V	**5700 mAh**	**Wires: GND black, NTC yellow, POSITIVE red**	**5500092**

For notes on connection and safe operation, please refer to the operating instructions.

Battery solutions

BATTERY PACKS

Lithium-Ion technology.
All products conform to transport standard UN38.3.

Technical data

Cell type	INR18650-29E
Charge voltage	29.4 V (7S1P, 7S2P), 42.0 V (10S3P)
Charge current	1375 mA (7S1P), 2750 mA (7S2P), 4125 mA (10S3P)
Max. charge current	2750 mA (7S1P), 5500 mA (7S2P), 8250 mA (10S3P)
Discharge current (cont.)	2750 mA (7S1P), 5500 mA (7S2P), 8250 mA (10S3P)
Discharge voltage	17.5 V (7S1P, 7S2P), 25.0 V (10S3P)
NTC	10 K, B = 3380 (7S1P), 10 K, B = 3988 (7S2P, 10S3P)
Cell balancing	7S1P, 7S2P, 10S3P

Safety specifications

Standards	IEC62133 (7S2P), UN38.3

Mechanical data

Dimensions	74.0 x 36.0 x 75.0 mm (7S1P), 133.0 x 38.0 x 75.0 mm (7S2P), 204.0 x 62.0 x 75.0 mm (10S3P)
Weight	378 g (Article no. 5500093), 384 g (Article no. 5500006), 720 g (Article no. 5500094), 724 g (Article no. 5500007)
Cable length	200 mm
Connector	JST J300 (Article no. 5500006, 5500007, 5500008)

7S1P

optionally with SMBus interface

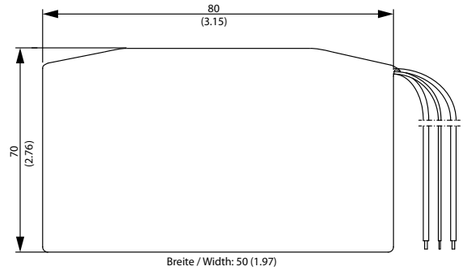

Alle Abmessungen in Millimeter (Inch), Abweichung ± 0,5 (0.02)
All Dimensions in Millimeter (Inch), Deviation ± 0,5 (0.02)

Battery pack 7S1P			
Nominal voltage	Charge current	Connector	Article no.
25.55 V	**2850 mAh**	**JST connector: PIN 1 GND black, PIN 2 NTC yellow, PIN 3 POSITIVE red**	**5500006**
25.55 V	**2850 mAh**	**Wires: GND black, NTC yellow, POSITIVE red**	**5500093**

7S2P

optionally with SMBus interface

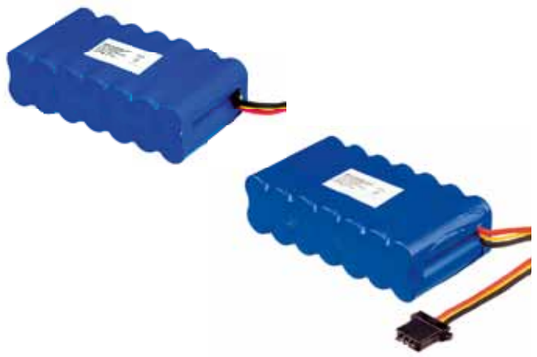

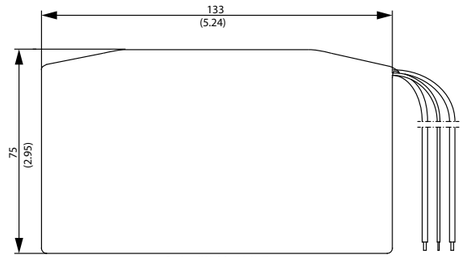

Alle Abmessungen in Millimeter (Inch), Abweichung ± 0,5 (0.02)
All Dimensions in Millimeter (Inch), Deviation ± 0,5 (0.02)

Battery pack 7S2P			
Nominal voltage	Charge current	Connector	Article no.
25.55 V	**5700 mAh**	**JST connector: PIN 1 GND black, PIN 2 NTC yellow, PIN 3 POSITIVE red**	**5500007**
25.55 V	**5700 mAh**	**Wires: GND black, NTC yellow, POSITIVE red**	**5500094**

10S3P

with SMBus interface

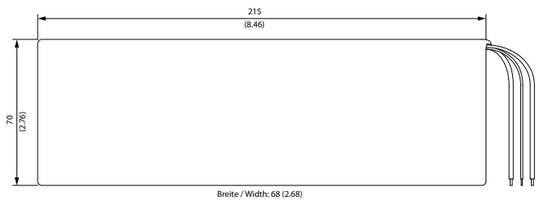

Alle Abmessungen in Millimeter (Inch), Abweichung ± 0,5 (0.02)
All Dimensions in Millimeter (Inch), Deviation ± 0,5 (0.02)

Battery pack 10S3P			
Nominal voltage	Charge current	Connector	Article no.
36.5 V	**8550 mAh**	**on request**	**5500008**

For notes on connection and safe operation, please refer to the operating instructions.

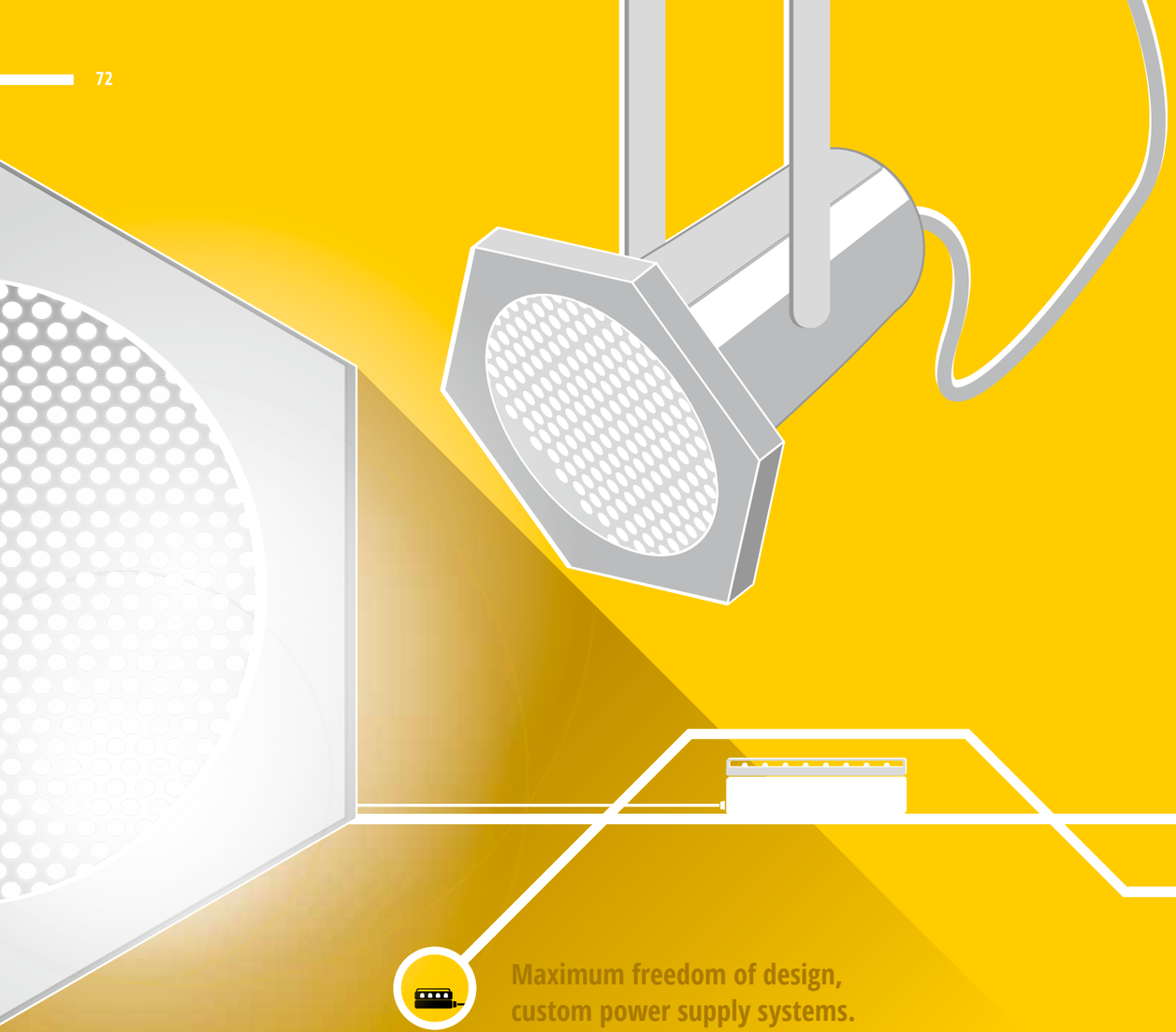

Maximum freedom of design,
custom power supply systems.

LED drivers

FOR CREATIVE LIGHTING

The FRIWO LED driver series: Custom power supply solutions for your lighting concept. Featuring minimal housing cross sections and a variety of shapes, they offer maximum freedom of design. From flush-mounted drivers that are safe from vandalism to installation in the narrowest casings, FRIWO's standard drivers offer the ideal basis for the creative design of lighting solutions.
FRIWO's LED drivers offer maximum efficiency. LED power supply systems are subject to particular requirements with regard to safety (EN 61347-1/-2-13), EMC (EN 55015) and harmonic current emissions. In compliance with those guidelines, the drivers in the LT range control the power and voltage for a single device.

FRIWO offers a comprehensive LED portfolio, including LED drivers, the DIMMbox and LS12 light control, which offer excellent dimming solutions using DALI, Push-Dim or 1-10V. The LS12 even allows up to 100 LED drivers to be controlled in parallel, and features an additional power supply for external sensors. From safe power supply units to creative light control, FRIWO's modular system allows various components to be combined in a solution that precisely meets your individual needs.

FRIWO's LED power supply solutions: a comprehensive range.

Platform portfolio

LED DRIVERS

All products conform to EN 61347-1 and EN 61347-2-13.

Characteristics

- Overload protection
- Overvoltage protection
- Continuously short circuit proof

Technical data

Input voltage	220 – 240 V, 120 V (LT20-24/833 US)
Frequency	50 – 60 Hz
Inrush current	20000 mA, 17000 mA (LT10-24 UP) 17600 mA (LT10-31 UP)
Leakage current	≤ 250 µA
Output voltage tolerance	± 2 %
Output current tolerance	± 5 %
Efficiency (typ. full load)	≥ 84 %
MTBF	200.000 h

Environmental specifications

Operating temperature	-20 – 45° C
Humidity	5 – 95 %
Storage temperature	-40 – 70° C
Operating altitude	2000 m

Safety specifications

Standards	EN 61347-1, EN 61347-2-13, UL1310 (LT20-24/833 US) UL8750 (LT20-24/833 US)
Safety class	II
EMC	EN 55015, EN 61000-3-2, EN 61547, EN 62384

Mechanical data

Dimensions	51.0 x 48.0 x 25.0 mm (LT10-12 UP, LT10-24 UP, LT10-36 UP, LT10-36/300 UP) 51.0 x 48.0 x 35.0 mm (LT10-31 UP, LT20 UP) 120.0 x 30.0 x 21.0 mm (LT10) 153.0 x 30.0 x 21.0 mm (LT20)
Weight	60 g (LT10) 82 g (LT20) 90 g (LT10-12 UP, LT10-24 UP, LT10-36 UP, LT10-36/300 UP) 125 g (LT10-31 UP, LT20 UP)
Connectors	AC input: Wires 2 x 0.75 mm² (LT UP), Terminal strips 0.5 - 1.5 mm² (LT10, LT20) DC output: 2 x AWG20 (LT UP), Terminal strips 0.5 - 1.5 mm² (LT10, LT20)

Please find accessories on page 82.

For notes on connection and safe operation, please refer to the operating instructions.

LT UP

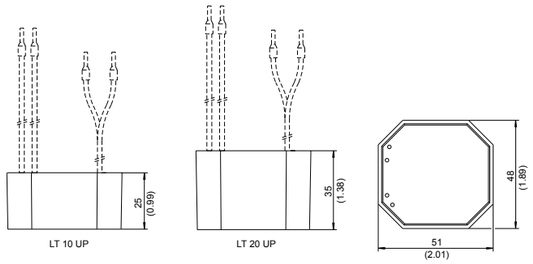

Alle Abmessungen in Millimeter (Inch), Abweichung ± 0,5 (0.02)
All Dimensions in Millimeter (Inch), Deviation ± 0,5 (0.02)

Model	Output data*				Article no.
	Constant current mode (CC)		Constant voltage mode (CV)		
	Voltage	Current	Voltage	Current	
LT10-12 UP	8 - 12 V	1000 mA	12 V	0 - 950 mA	1896539
LT10-24 UP	8 - 23.4 V	500 mA	24 V	0 - 475 mA	1896408
LT10-36 UP	8 - 36 V	350 mA	37 V	0 - 325 mA	1895582
LT10-36/300 UP	8 - 36 V	300 mA	37 V	0 - 285 mA	1897066
LT20-24 UP	12 - 24 V	850 mA	24 V	0 - 810 mA	1896409
LT20-31 UP	15 - 30 V	700 mA	31 V	0 - 680 mA	1895583
LT20-36/600 UP	15 - 35 V	600 mA	37 V	0 - 570 mA	1897067

LT10

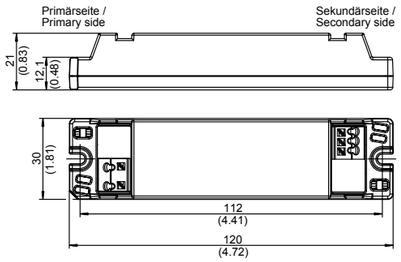

Alle Abmessungen in Millimeter (Inch), Abweichung ± 0,5 (0.02)
All Dimensions in Millimeter (Inch), Deviation ± 0,5 (0.02)

Model	Output data*				Article no.
	Constant current mode (CC)		Constant voltage mode (CV)		
	Voltage	Current	Voltage	Current	
LT10-12	1 - 11.4 V	700 mA	12 V	3 - 630 mA	1895611
LT10-16	1 - 15 V	700 mA	16 V	3 - 630 mA	1895089
LT10-24	1 - 22.5 V	550 mA	24 V	3 - 500 mA	1896009
LT10-32	2 - 30 V	350 mA	32 V	3 - 315 mA	1895008
LT10-32 DB**	8 - 31.2 V	350 mA	32 V	0 - 332 mA	1895541
LT10-36/300	8 - 36 V	300 mA	37 V	0 - 285 mA	1897064

** DB = DIMMbox connectivity

LT20

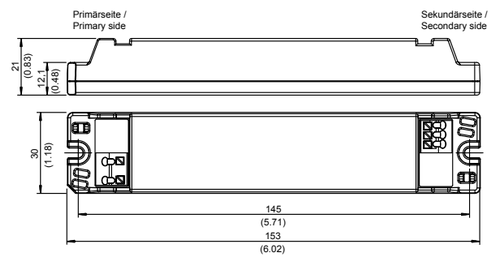

Alle Abmessungen in Millimeter (Inch), Abweichung ± 0,5 (0.02)
All Dimensions in Millimeter (Inch), Deviation ± 0,5 (0.02)

Model	Output data*				Article no.
	Constant current mode (CC)		Constant voltage mode (CV)		
	Voltage	Current	Voltage	Current	
LT20-24/833	15 - 23.5 V	833 mA	24 V	0 - 800 mA	1899064
LT20-24/833 US	15 - 23.5 V	833 mA	24 V	0 - 800 mA	1896669
LT20-28/700	7 - 27.5 V	700 mA	28 V	0 - 665 mA	1899069
LT20-28/700 1-10 V	16 - 27.5 V	700 mA	28 V	0 - 665 mA	1897012
LT20-40/500 1-10 V	16 - 39.2 V	500 mA	40 V	0 - 475 mA	1897014
LT20-48/350 1-10 V	20 - 47 V	350 mA	48 V	0 - 332 mA	1897015

* Standard units will be delivered with highest output voltage / output current.

Platform portfolio

LED DRIVERS

All products conform to EN 61347-1 and EN 61347-2-13.

Characteristics

- Overload protection
- Overvoltage protection
- Continuously short circuit proof

Technical data

Input voltage	220 – 240 V, 100 – 120 V (LT40-24/1250 US)
Frequency	50 – 60 Hz
Inrush current	20000 mA
Leakage current	≤ 250 µA
	≤ 500 µA (LT40-24/1250 US)
Output voltage tolerance	± 2 %
Output current tolerance	± 5 %
Efficiency (typ. full load)	≥ 84 %
MTBF	200.000 h

Environmental specifications

Operating temperature	-20 – 45° C
Humidity	5 – 90 %
Storage temperature	-40 – 70° C
Operating altitude	2000 m

Safety specifications

Standards	EN 61347-1, EN 61347-2-13, UL1310 (LT40-24/1250 US)
	UL8750 (LT40-24/1250 US)
Safety class	II
EMC	EN 55015, EN 61000-3-2, EN 61547, EN 62384

Mechanical data

Dimensions	188.0 x 30.0 x 21.0 mm (LT40)
	200.0 x 30.0 x 21.0 mm (LT40 WP)
Weight	106 g (LT40)
	200 g (LT40 WP)
Connectors	AC input: Terminal strips 0.5 - 1.5 mm² (LT40),
	Lead H05RN-F, 1 mm², length 355 mm (LT40 WP)
	DC output: Terminal strips 0.5 - 1.5 mm² (LT40),
	Lead 2 x 0.5 mm², length 180 mm (LT40 WP)

LT40

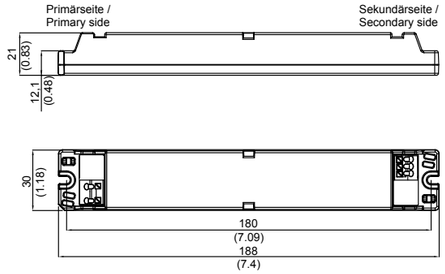

Alle Abmessungen in Millimeter (Inch), Abweichung ± 0,5 (0.02)
All Dimensions in Millimeter (Inch), Deviation ± 0,5 (0.02)

Model	Output data*				Article no.
	Constant current mode (CC)		Constant voltage mode (CV)		
	Voltage	Current	Voltage	Current	
LT40-24/1250 US	10 - 23.5 V	1250 mA	24 V	0 - 1200 mA	1896600
LT40-24/1400	10 - 23.5 V	1400 mA	24 V	0 - 1330 mA	1899083
LT40-24/1460	10 - 23.5 V	1460 mA	24 V	0 - 1400 mA	1899082
LT40-24/1400 1-10 V	15 - 23.5 V	1400 mA	24 V	0 - 1330 mA	1897016
LT40-36/1050 1-10 V	15 - 35.5 V	1050 mA	36 V	0 - 1000 mA	1897017
LT40-48/700 1-10 V	22 - 47 V	700 mA	48 V	0 - 665 mA	1899084

LT40 WP

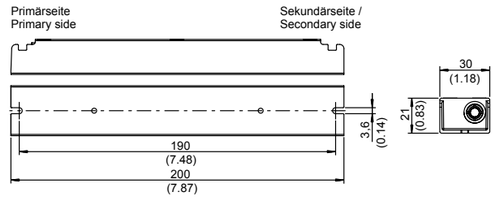

Alle Abmessungen in Millimeter (Inch), Abweichung ± 0,5 (0.02)
All Dimensions in Millimeter (Inch), Deviation ± 0,5 (0.02)

Model	Output data*				Article no.
	Constant current mode (CC)		Constant voltage mode (CV)		
	Voltage	Current	Voltage	Current	
LT40-24 WP	10 - 23.5 V	1400 mA	24 V	0 - 1330 mA	1894660
LT40-36 WP	15 - 35.3 V	1200 mA	36 V	0 - 1000 mA	1894661
LT40-48 WP	22 - 47 V	700 mA	48 V	0 - 665 mA	1894662

Please find accessories on 82.
For notes on connection and safe operation, please refer to the operating instructions.

* Standard units will be delivered with highest output voltage / output current.

Platform portfolio

LED DRIVERS

All products conform to EN 61347-1 and EN 61347-2-13.

Characteristics

- Overload protection
- Overvoltage protection
- Continuously short circuit proof

Technical data

Input voltage	220 – 240 V, 100 – 277 V (LT60-24/2500 WR)
Frequency	50 – 60 Hz
Inrush current	22000 mA (LT60-85/700 1-10 V, LT60-170/350 1-10 V, LT60 SQ) 24000 mA (LT60-24/2500 1-10 V, LT60-36/1600 1-10 V, LT60-48/1200-1-10 V, LT60 DPA) 45000 mA (LT60-24/2500 WR)
Leakage current	≤ 250 µA
Output voltage tolerance	± 2 %
Output current tolerance	± 5 %
Efficiency (typ. full load)	≥ 84 %
MTBF	200.000 h

Environmental specifications

Operating temperature	-20 – 45° C
Humidity	5 – 90 %
Storage temperature	-40 – 70° C
Operating altitude	2000 m

Safety specifications

Standards	EN 61347-1, EN 61347-2-13, UL1310 (LT60-24/2500 WR) UL8750 (LT60-24/2500 WR)
Safety class	II
EMC	EN 55015, EN 61000-3-2, EN 61547, EN 62384

Mechanical data

Dimensions	240.0 x 30.0 x 21.0 mm (LT60) 305.0 x 30.0 x 24.0 mm (LT60-24/2500 WR) 130.0 x 60.0 x 21.0 mm (LT60 SQ) 170.0 x 100.0 x 30.0 mm (LT60 DPA)
Weight	130 g (LT60, LT60 SQ) 185 g (LT60-24/2500 WR) 392 g (LT60 DPA)
Connectors	Terminal strips 0.5 - 1.5 mm²

Please find accessories on 82.
For notes on connection and safe operation, please refer to the operating instructions.

LT60

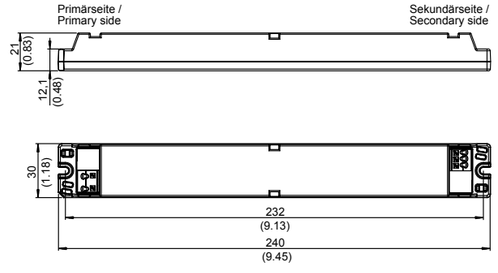

Alle Abmessungen in Millimeter (Inch), Abweichung ± 0,5 (0.02)
All Dimensions in Millimeter (Inch), Deviation ± 0,5 (0.02)

Model	Output data*				Article no.
	Constant current mode (CC)		Constant voltage mode (CV)		
	Voltage	Current	Voltage	Current	
LT60-24/2500 WR***	15 - 23.5 V	2500 mA	24 V	0 - 2375 mA	1898616
LT60-24/2500 1-10 V	15 - 23.5 V	2500 mA	24 V	0 - 2375 mA	1897319
LT60-24/1600 1-10 V	22 - 35 V	1600 mA	36 V	0 - 1520 mA	1897320
LT60-48/1200 1-10 V	30 - 47 V	1200 mA	48 V	0 - 1140 mA	1897304
LT60-85/700 1-10 V	40 - 85 V	700 mA	85 V	0 - 680 mA	1896459
LT60-170/350 1-10 V	100 - 170 V	350 mA	170 V	0 - 350 mA	1896458

** excluding LT60-170/350 1-10 V
*** Housing: see LT100

LT60 SQ

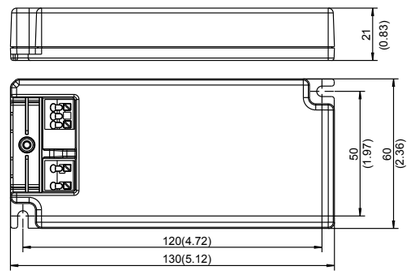

Alle Abmessungen in Millimeter (Inch), Abweichung ± 0,5 (0.02)
All Dimensions in Millimeter (Inch), Deviation ± 0,5 (0.02)

Model	Output data*				Article no.
	Constant current mode (CC)		Constant voltage mode (CV)		
	Voltage	Current	Voltage	Current	
LT60-24 SQ	15 - 23.5 V	2500 mA	24 V	0 - 2375 mA	1895735
LT60-36 SQ	22 - 35 V	1600 mA	36 V	0 - 1520 mA	1895373
LT60-48 SQ	30 - 47 V	1200 mA	48 V	0 - 1140 mA	1895950

LT60 DPA

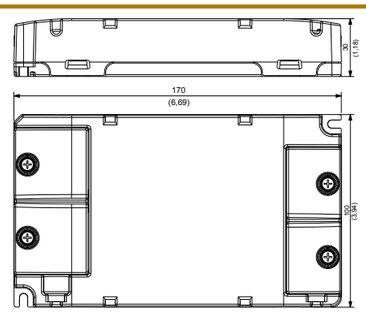

Alle Abmessungen in Millimeter (Inch), Abweichung ± 0,5 (0,02)
All Dimensions in Millimeter (Inch), deviation ± 0,5 (0,02)

Model	Output data*		Article no.
	Constant current mode (CC)		
	Voltage	Current	
LT60 DPA	18 - 42 V	350 - 1400 mA	1895499

* Standard units will be delivered with highest output voltage / output current.

Platform portfolio

LED DRIVERS

All products conform to EN 61347-1 and EN 61347-2-13.

Characteristics

- Overload protection
- Overvoltage protection
- Continuously short circuit proof

Technical data

Input voltage	220 – 240 V, 110 – 277 V (LT80-24/3300 WR)
Frequency	50 – 60 Hz
Inrush current	20000 mA (LT100-142/700 1-10 V, LT100-285/350 1-10 V, LT100-330/300 1-10 V)
	34000 mA (LT100-24/4200 1-10 V, LT100-36/2800 1-10 V, LT100-48/2100 1-10 V)
	45000 mA (LT80-24/3300 WR)
Leakage current	≤ 250 µA
Output voltage tolerance	± 2 %
Output current tolerance	± 5 %
Efficiency (typ. full load)	≥ 84 %
MTBF	200.000 h

Environmental specifications

Operating temperature	-20 – 45° C
Humidity	5 – 90 %
Storage temperature	-40 – 70° C
Operating altitude	2000 m

Safety specifications

Standards	EN 61347-1, EN 61347-2-13, UL1310 (LT80-24/3300 WR)
	UL8750 (LT80-24/3300 WR)
Safety class	II
EMC	EN 55015, EN 61000-3-2, EN 61547, EN 62384

Mechanical data

Dimensions	305.0 x 30.0 x 24.0 mm (LT80, LT100)
	153.0 x 30.0 x 21.0 mm (DIMMbox, LS12)
Weight	57 g (DIMMbox)
	61 g (LS12)
	185 g (LT80, LT100)
Connectors	Terminal strips 0.5 - 1.5 mm²

Please find accessories on 82.
For notes on connection and safe operation, please refer to the operating instructions.

LT80 / LT100

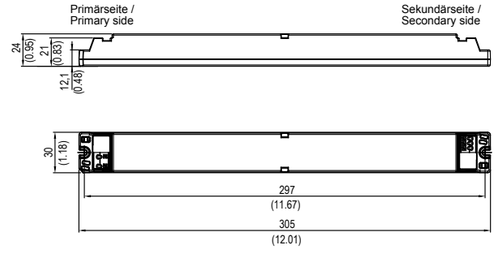

Alle Abmessungen in Millimeter (Inch), Abweichung ± 0,5 (0.02)
All Dimensions in Millimeter (Inch), Deviation ± 0,5 (0.02)

Model	Output data*				Article no.
	Constant current mode (CC)		Constant voltage mode (CV)		
	Voltage	Current	Voltage	Current	
LT80-24/3300 WR	15 - 23.5 V	3300 mA	24 V	0 - 3135 mA	1898618
LT100-24/4200 1-10 V	15 - 23.5 V	4200 mA	24 V	0 - 4000 mA	1897322
LT100-36/2800 1-10 V	22 - 35.5 V	2800 mA	36 V	0 - 3660 mA	1897321
LT100-48/2100 1-10 V	30 - 47 V	2100 mA	48 V	0 - 2000 mA	1897000
LT100-142/700 1-10 V	100 - 136 V	700 mA	142 V	0 - 600 mA	1896461
LT100-285/350 1-10 V	240 - 280 V	350 mA	285 V	0 - 300 mA	1896460
LT100-330/300 1-10 V	250 - 310 V	300 mA	330 V	0 - 257 mA	1896153

** excluding LT100-142/700 1-10 V, LT100-285/350 1-10 V, LT100-330/300 1-10 V

DIMMbox

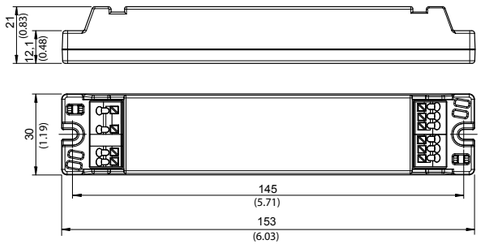

Alle Abmessungen in Millimeter (Inch), Abweichung ± 0,5 (0.02)
All Dimensions in Millimeter (Inch), Deviation ± 0,5 (0.02)

Model	Output data*		Article no.
	Voltage	Current	
DIMMbox	15 - 50 V	5000 mA	1894848
DIMMbox 1-10 V AUS	15 - 50 V	5000 mA	1896084
DIMMbox CV	15 - 50 V	5000 mA	1897004

Functional description

The DIMMbox and the connected LED(s) are powered by the power supply / LED driver at the input of the DIMMbox. The dimming function is achieved by pulse width modulation control (PWM) at the LED minus output. Switching frequency is around 600Hz.

DIMMbox:	control range 10 – 100 %
DIMMbox 1-10 OFF:	control range 10 – 100 %, at an interface voltage between 1 – 10 V / < 0,7 V = off
DIMMbox CV:	control range 1 – 100 %, at an interface voltage between 1 – 10 V

LS12

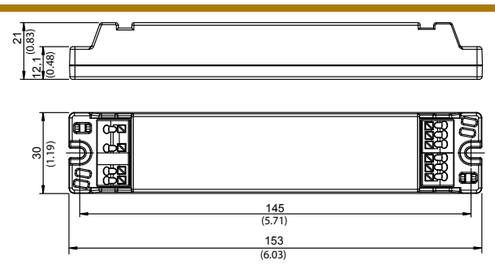

Alle Abmessungen in Millimeter (Inch), Abweichung ± 0,5 (0.02)
All Dimensions in Millimeter (Inch), Deviation ± 0,5 (0.02)

Model	Output data*		Article no.
	Voltage	Current	
LS12/100 DPA	13 V ±1	100 mA	1895885

Functional description

The light control is a converter for light control signals. An extended 1 – 10 V interface serves as output. For input DALI, PUSH-DIM, a PWM signal or a 1 – 10 V dimmer can be chosen.
The output is synchronized with the FRIWO LED drivers and their integrated 1 – 10 V interface.

* Standard units will be delivered with highest output voltage / output current.

Standard devices that meet specific needs.

Accessories

MORE PRODUCTS, WITH MORE FEATURES

Accessories from FRIWO for power supply units, chargers and LED drivers: A wide range of primary adapters, secondary adapters, power cords and protective covers allow our customers to flexibly enhance the mobility, reliability and availability of their products.

Primary adapters
Primary adapters for FRIWO's easy-to-use interchangeable adapter systems allow products to be used globally and can result in considerable reductions in the cost of logistics. The adapters featuring IP42-certified splash protection, which are available from FRIWO for the FOX system, are a particular highlight.
The IEC adapter (IEC320 C8) offers a standard alternative for countries with different power plugs.

Global availability is not magic – but it's pretty close.

Secondary adapters
All of FRIWO's standard devices are delivered with a 1.83-meter cable and its tried-and-tested, comprehensive secondary adapter system. A range of easy-to-mount coaxial and jack connectors makes the system extremely flexible for use in a wide range of applications. The required polarity can be achieved by reversing the secondary connector. Custom cables can also be installed.

Power cords
Together with the DT range and the FOX and GPP interchangeable adapter system from FRIWO, power cords with the IEC320 C7 power plug offer the right solution for every country. All power cords are 2 meters long and suitable for use with the appropriate IEC320 C8 socket.

Protective covers for LED drivers
Protective covers for the LT range from FRIWO offer an easy way to permanently install LED drivers and light control units, while also protecting their electrical contacts.

ACCESSORIES

Primary adapters

The easy-to-use, interchangeable primary adapters for FRIWO's adapter systems make it possible to use products globally and can result in considerable reductions in the cost of logistics. The company's IP42 splash-proof adapters featuring IP42-certified splash protection, which are available from FRIWO for the FOX system, are a particular highlight. The IEC adapter (IEC320 C8) offers a standard alternative for countries with different power plugs.

Primary adapters FOX system

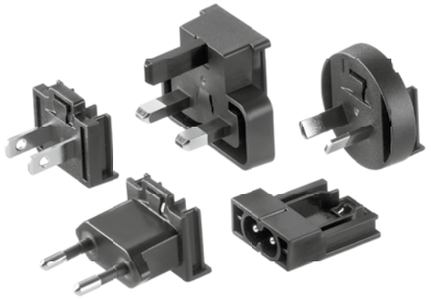

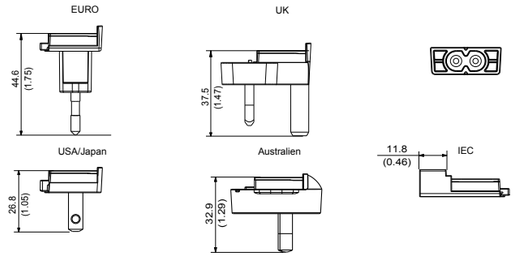

Alle Abmessungen in Millimeter (Inch), Abweichung ± 0,5 (0.02)
All Dimensions in Millimeter (Inch), Deviation ± 0,5 (0.02)

FOX	IPx0	IPx2	FOX	IPx0	IPx2
Country	Article no.	Article no.	Country	Article no.	Article no.
EURO	1847556	1847618	BRA	1847551	–
UK	1847544	1847606	CHN	1847550	–
USA / JPN	1847554	1847604	IND 2 pole	1847547	–
AUS	1847553	1847624	IND 3 pole	1847546	–
IEC	1847552	1847616	KOR	1847545	–
ARG	1847548	–	ZAF	1847549	–

Primary adapters GPP system

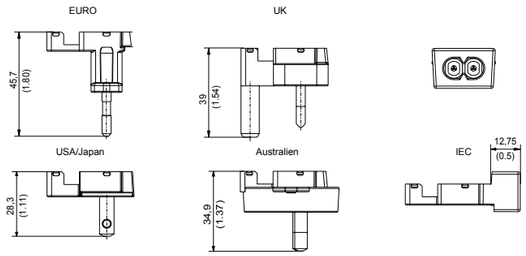

Alle Abmessungen in Millimeter (Inch), Abweichung ± 0,5 (0.02)
All Dimensions in Millimeter (Inch), Deviation ± 0,5 (0.02)

GPP			
Country	Article no.	Country	Article no.
EURO	1827417	BRA	1835621
UK	1827420	CHN	1835620
USA / JPN	1827422	IND	1831323
AUS	1827425	KOR	1835619
IEC	1827428	ZAF	1838236
ARG	1831610		

Power cords

Together with our DT range and the FOX and GPP interchangeable adapter systems, power cords with the IEC320 C7 power plug offer the right solution for every country. All power cords are 2 meters long and suitable for use with the appropriate IEC320 C8 socket.

Power cords

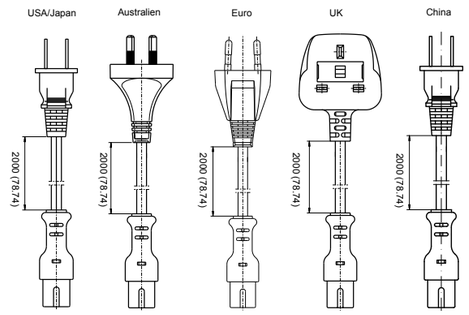

Alle Abmessungen in Millimeter (Inch), Abweichung ± 0,5 (0.02)
All Dimensions in Millimeter (Inch), Deviation ± 0,5 (0.02)

Power cords			
Country	Article no.	Country	Article no.
EURO	1812274	AUS	1812277
UK	1812275	CHN	1843276
USA / JPN	1812276		

For notes on connection and safe operation, please refer to the operating instructions.

ACCESSORIES

Secondary adapters

All of FRIWO's standard devices are delivered with a 1.83-meter round cable and its tried-and-tested, comprehensive secondary adapter system. A range of easy-to-mount coaxial and jack connectors makes the system extremely flexible for use in a wide range of applications. The required polarity can be achieved by reversing the secondary connector. Custom cables can also be installed. Our experts are always happy to help you choose what you need.

Secondary adapter system

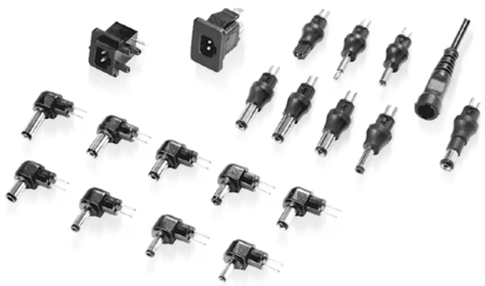

Straight coaxial connectors			
Ø out.	Ø in.	Length mm	Article no.
3.5	1.3	9.5	1807699
4.0	1.7	9.5	1822557
4.0	1.7	11.0	1811994
4.8	1.7	9.5	1822559
5.5	2.1	9.5	1807700
5.5	2.1	11.5	1807701
5.5	2.1	14.0	1807697
5.5	2.5	9.5	1807698
5.5	2.5	11.5	1807702
5.5	3.3	9.5	1822561
DIN 45323			1807703

Angled coaxial connectors			
Ø out.	Ø in.	Length mm	Article no.
3.5	1.3	9.5	1822478
4.0	1.7	9.5	1822558
4.0	1.7	11.0	1822482
4.8	1.7	9.5	1822560
5.5	2.1	9.5	1822479
5.5	2.1	11.5	1822480
5.5	2.1	14.0	1822476
5.5	2.5	9.5	1822477
5.5	2.5	11.5	1822481
5.5	3.3	9.5	1822562
DIN 45323			1822483

Straight jack connectors		
Ø out.	Length mm	Article no.
2.5	13	1807704
3.5	14	1807705

Angled jack connectors		
Ø out.	Length mm	Article no.
2.5	13	1822484
3.5	14	1822485

Connectors / Sockets	
Model	Article no.
Texas connector	
Straight Texas connector	1807706
Angled Texas connector	1822486
Texas sockets 2-pin	
Snap-in type	1323938
PCB type	1321609
Texas sockets 3-pin	
Snap-in type	1327259
PCB type	1363506

LT protective covers

Protective covers for the LT range from FRIWO offer an easy way to permanently install LED drivers and light control units, while also protecting their electrical contacts.

Protective covers for LED drivers

Protective covers	
Model	Article no.
LT Cap	1839772

For LT10, LT20, LT40, LT60, LT80, LT100, DIMMbox and LS12

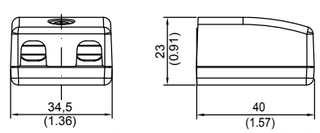

Alle Abmessungen in Millimeter (Inch), Abweichung ± 0,5 (0.02)
All Dimensions in Millimeter (Inch), Deviation ± 0,5 (0.02)

Protective covers	
Model	Article no.
LT Cap Slim	1844170

For LT10, LT20, LT40, LT60, LT80, LT100, DIMMbox and LS12

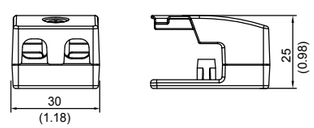

Alle Abmessungen in Millimeter (Inch), Abweichung ± 0,5 (0.02)
All Dimensions in Millimeter (Inch), Deviation ± 0,5 (0.02)

Protective covers	
Model	Article no.
LT Cap Slim Short	1896330

For LT10, LT20, LT40, LT60, LT80, LT100, DIMMbox and LS12

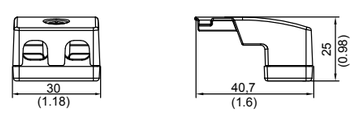

Alle Abmessungen in Millimeter (Inch), Abweichung ± 0,5 (0.02)
All Dimensions in Millimeter (Inch), Deviation ± 0,5 (0.02)

Protective covers	
Model	Article no.
LT Cap SQ	1848693

For LT60 SQ

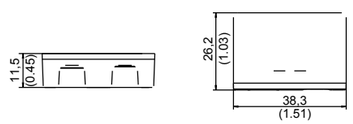

Alle Abmessungen in Millimeter (Inch), Abweichung ± 0,5 (0.02)
All Dimensions in Millimeter (Inch), Deviation ± 0,5 (0.02)

For notes on connection and safe operation, please refer to the operating instructions.

From experienced users to those starting a new career: Welcome!

FRIWO Academy

THOSE WHO CAN, DO

Power supply units, starting with the invention of the world's first AC adapter in 1971: FRIWO shares its extensive experience with customers and partners. The FRIWO Academy regularly gives developers, buyers, technicians and product managers the opportunity to learn more about basics, trends and innovations in the field of performance electronics.

Access to comprehensive specialist knowledge and the latest technologies.

By doing so, the company offers participants access to its comprehensive specialist knowledge and the latest technologies. The FRIWO Academy relies on small seminar groups to create the most effective learning environment possible. From experienced users to those starting a new career, everyone is welcome to come and learn from our experts in a pleasant atmosphere. Depending on the topic, FRIWO complements its team of experts with selected external specialists, adding even more value to the seminars, with presentations and training exercises.

An example seminar: "Fundamentals of battery and charging technology." In this one-day training course, FRIWO's experts explain the fundamental principles of lithium-ion power storage solutions, with support from TÜV Süd. Along with conveying basic information about battery and charger technology, the course also addresses licensing, guidelines and certification, storage and transport conditions, battery management systems and inductive charging concepts.

GLOSSARY

Battery type	Lead Acid	NiCd	NiMH	Li-Ion cobalt	Li-Ion manganese	$LiFePO_4$
Cell voltage	2.0 V	1.2 V	1.2 V	3.6 resp. 3.7 V		3.3 V
Energy density (Wh/kg)	30 – 50	45 – 80	60 – 120	110 – 190	110 – 120	90 – 130
Self-discharge ratio per month	5 %	20 %	30 %	2 – 5 %		2 – 5 %
Overload tolerance	high	moderate	low	very low		very low
Charging cycles	200 – 400	1500	300 – 500	300 – 500		1000 – 2000
Charging method	U = const.	I = const.	I = const.	U = const.		U = const.
Charging characteristic	IUOU, IUIa	IOI	IOI	IUa		IUa
	Phase 1: constant current	Charging criteria: -dV, dT/dt, dU/dt, T_{max}		Phase 1: constant current		Phase 1: constant current
	Phase 2: constant voltage	Identification and control via microcontroller		Phase 2: constant voltage ± 1 % tolerance		Phase 2: constant voltage ± 1 % tolerance
	Phase 3: trickle charge					

Standards	Office / IT	Medical	Tools, chargers, toys, household appliances	EMC	Surge	Burst
EU	EN 60950-1	EN 60601-1	EN 60335-1	EN 61000 / EN 55014	EN 61000-4-4	EN 61000-4-5
USA	UL 60950-1	UL 60601-1	UL 1310 / E 60335 / UL 697	FCC 47 Teil 15 / EN 61000	EN 61000-4-4	EN 61000-4-5
Canada	C22.2 No. 60950-1	C22.2 No. 60601-1-M90	C22.2 No. 223-M 91 C22.2 No. 173-M 1983 (Toys)	FCC 47 Teil 15 / EN 61000	EN 61000-4-4	EN 61000-4-5
China	GB 4943	GB 9706.1	GB 4706	GB 4343.1	GB/T 17626.4	GB/T 17626.5

Abbreviations

DT = Desktop
E²MS = Electronic Engineering & Manufacturing Services
FOX = FRIWO One-Click Xchange
GPP = Global Power Plug
LED = Light Emitting Diode
LT = LED Driver
OF = Open Frame
PP = Power Plug
SMD = Surface-Mounted Device
UP = In-wall
USB = Universal Serial Bus

Cell chemistries

Li-Ion = Lithium Ion
$LiFePO_4$ = Lithium Iron Phosphate
NiCd = Nickel Cadmium
NiMH = Nickel Metal Hydride
Pb = Lead Acid

Ambient temperature

Temperature of inactive air which surrounds the power supply. It is usually measured approx. 10 mm apart from the running power supply.

Class B

Protection against electric shock in due consideration of the leakage current.

Class BF

Like class B, but taking into account the so-called „F parts" which may accidentally come into contact with the patient and which are isolated from other parts.

Class CF

Class with the highest protection.

Continuously Short Circuit Proof

A short circuit might occur without damaging the output. As soon as the problem is solved, the output will return to normal service.

Current limited

Electronic overload protection which limits the maximum output current to a preset value.

Efficiency

Efficiency is calculated as the ratio of output to input power and is always smaller than 1. To reduce the power loss under the given load prerequisites, the maximum efficiency ratio is aspired. For a power supply it is measured at full load and at nominal input. The difference between input and output is transposed into heat, hence each increase of the efficiency ratio means less thermal stress on the components and therefore a life-cycle increase. Even a minor improvement of the efficiency ratio can have a dramatic impact on the life-cycle.

EMC

The ability of electrical equipment to function satisfactorily in its electromagnetic environment without negative interferences. Power supplies should meet at least two generic standards for EMC:

1. standard for transient emissions (grid-bound interferences emitted by the power supply) and
2. standard for interference immunity (protection against external interferences)

These generic standards comprise a multitude of sub-standards that define threshold values for subdomains (for example certain types of interferences). FRIWO power supplies meet these standards to a higher degree than required to make the most of EMC, and to safeguard a trouble-free service.

Leakage current

A current that flows through the ground when a device is in operation. It flows above capacity and the insulation resistance of an operating circuit over the protective ground conductor of a device.

Life-cycle

Life-cycle of a power supply. After the end of life power supplies are likely to break down because of worn components.

MTBF

MTBF stands for Mean Time Between Failures (Average time between two consecutive device failures). The MTBF indicates when a device fails on average due to processing or component defects before signs of wear set in.

NTC

A temperature-sensitive resistor with negative coefficient which reduces the resistance as temperature increases. It is therefore also called thermistor. It serves not only the temperature monitoring but also limits the inrush current of power supplies.

Operating temperature

Temperature of still air surrounding the device. It is usually measured approx. 10 mm next to the operated device.

Overvoltage resistance

A circuitry within the power supplies monitors the output. If a preset threshold value is exceeded, the power supply will be turned off.

Short circuit proof

Short circuit proof means that a temporary short circuit can be absorbed without damage.

Single range

Power supplies with single input voltage for the use in the respective countries.

SMT

SMT is a surface mount technology which allows surface mountable components with solderable pads (without wire connectors) to be soldered directly onto a PCB.

Standby losses

Power consumption of a power supply during idle service.

Storage temperature

Temperature range in which a device may be stored (not operated) without being damaged.

THT

Stands for „through-hole technology". Wired components are connected to the PCB by vias and connected by a special THT soldering process.

Voltage controlled

A control loop in the power supply stabilizes the output voltage, independent of all factors (e.g. temperature).

Wide range

Power supplies with wide range input can be operated at different nominal voltages without having to be adjusted (manually or automatically).

FRIWO WORLDWIDE / SALES

Europe
Germany

FRIWO Gerätebau GmbH
Von-Liebig-Straße 11 · 48346 Ostbevern
Tel.: +49 2532 81-0 · Fax: +49 2532 81 112
sales@friwo.com · www.friwo.com

Sales office Southern Germany
Mollenbachstraße 14 · 71229 Leonberg
Tel.: +49 71 52 50 71 700 (Timo Klotz)
Tel.: +49 71 52 50 71 701 (Stefan Tullius)
Fax: +49 71 52 50 71 699
timo.klotz@friwo.com · stefan.tullius@friwo.com

France

Sales office France
Yves Hurman · Paris
Tel.: +33 6 82 58 33 78
yves.hurman@friwo.com · www.friwo.com

Asia
China

FRIWO Power Solutions Technology (ShenZhen) Co. Ltd.
7th. Flr., Building B, FeiYang Plant Zone,
No. 8 LongChang Rd., 67th BaoCheng,
Bao An District, Shenzhen
Postcode: 518101
Tel.: +86 755 33 25 58 88 · Fax: +86 755 33 26 02 60
lamon.lam@friwo.com · www.friwo.com

Japan

FRIWO Japan Branch
Masuni Dai-ichi Building, 6F 4-6,
Shinyokohama, 2-chome, Kohoku-ku,
Yokohama-shi, Kanagawa 222-0033
Tel.: +81 45 470 02 06 · Fax: +81 45 470 02 07
friwojp@friwojp.com · www.friwo.com

Vietnam

FRIWO Vietnam Co. Ltd.
Addr. Lot 240, Street No. 12, Amata Industrial Zone,
Bien Hoa City, Dong Nai Province,
Postcode: 810000
Tel.: +84 61 3891 170 · www.friwo.com

Agencies / Distributors
Europa

AUSTRIA

LED distribution:
Neumüller Elektronik GmbH
Gewerbegebiet Ost 7
91085 Weisendorf, Deutschland
Tel.: +49 91 35 7 36 66 0 · Fax: +49 91 35 7 36 66 60
info@neumueller.com · www.neumueller.com

BELGIUM

Alcom electronics NV / SA
Singel 3
2550 Kontich
Tel.: +32 3 458 30 33 · Fax: +32 3 458 31 26
info@alcom.be · www.alcom.be

FINLAND

Oy Flinkenberg Ab
Mikkelänkallio 3
02771 Espoo
Tel.: +358 98 599 11 · Fax: +358 98 599 13 06
electronics@flinkenberg.fi · www.flinkenberg.fi

FRANCE

CATS S. A. S.
19 avenue de Norvège - BP342
Villebon Sur Yvette
91958 Courtaboeuf Cedex
Tel.: +33 (0) 1 69 07 08 24
Fax: +33 (0) 1 69 07 17 23
friwo@cats-france.fr · www.cats-france.fr

GERMANY

Northern Germany:
Schroeter electronic Handelsgesellschaft mbH
Saseler Bogen 1
22393 Hamburg
Tel.: +49 40 60 00 06 0 · Fax: +49 40 60 00 06 30
info@schroeter-electronic-gmbh.de
www.schroeter-electronic-gmbh.de

LED distribution:
Neumüller Elektronik GmbH
Gewerbegebiet Ost 7
91085 Weisendorf
Tel.: +49 91 35 7 36 66 0 · Fax: +49 91 35 7 36 66 60
info@neumueller.com · www.neumueller.com

IRELAND

Eltech Ltd.
The Rubicon Centre
CIT Campus
Bishopstown
Cork
Tel.: +353 21 420 90 24 · Fax: +353 21 420 90 91
pcorkery@eltechireland.com

ISRAEL

Tamuz Electronics Ltd.
3 Hayozma St. Industrial Zone
P.O. Box 7124
4464102 Kfar-Saba
Tel.: +972 9 76 33 000 · Fax: +972 9 76 33 011
info@tamuz-ele.com · www.tamuz-ele.com

ITALY

ELSAP SPA
Viale Famagosta, 61
20142 Milano
Tel.: +39 02 89 12 52 72 · Fax: +39 02 89 12 53 04
fbenedetti@elsap.it · www.elsap.it

NETHERLANDS

Alcom Electronics B.V.
Rivium 1e straat 52
2909 LE Capelle a/d IJssel
Tel.: +31 10 288 25 00 · Fax: +31 10 288 25 25
info@alcom.nl · www.alcom.nl

POLAND

Elhurt Spółka z o.o.
ul. Galaktyczna 35A
80-299 Gdańsk
Tel.: +48 58 554 08 00 · Fax: +48 58 554 08 07
elhurt@elhurt.com.pl · www.elhurt.com.pl

RUSSIA

Eltech Ltd.
Ploschad Konstitutsii 3A
196247 Sankt Petersburg
Tel.: +7 812 327 90 90 · Fax: +7 812 635 50 70
friwo@eltech.spb.ru · www.eltech.spb.ru

SCANDINAVIA

AWILCO
Yderholmvej 64
4623 Lille Skensved
Dänemark
Tel.: +45 56 56 55 00
Fax: +45 56 56 55 05
mail@awilco.dk · www.awilco.dk

SLOVAKIA, HUNGARY, CZECHIA, ROMANIA

SOS electronic s.r.o.
Pri prachárni 16
040 11 Košice
Slowakei
Tel.: +421 55 786 04 15 · Fax: +421 55 786 04 45
info@sos.sk · www.soselectronic.sk

SLOVENIA

IC Elektronika d.o.o.
Vodovodna cesta 100
1000 Ljubljana
Tel.: +386 15 68 01 10 · Fax: +386 15 68 91 07
info@ic-elect.si · www.ic-elect.si

SPAIN / PORTUGAL

Matrix Electrónica, S.L.
C / Alejandro Sanchez, 109
28019 Madrid
Tel.: +34 91 56 02 737 · Fax: +34 91 56 28 65
matrix@matrix.es · www.matrix.es

SWITZERLAND

NOVITRONIC AG
Thurgauerstrasse 74
8050 Zürich
Tel.: +41 44 306 91 73 · Fax: +41 44 306 91 03
energietechnik@novitronic.ch · www.novitronic.ch

TURKEY

RADEL ELEKTRONİK DIŞ TİCARET VE SANAYİ A.Ş.
Necatibey Cadessi No. 81
Karaköy / Istanbul
Tel.: +90 21 22 93 84 16 · Fax: +90 21 22 93 74 43
arisy@superonline.com

UNITED KINGDOM

Haredata Electronics
Unit 6 Stoneacre,
Grimbald Crag Close,
St. James Business Park,
Knaresborough, North Yorkshire, HG5 8PJ
Tel.: +44 14 23 79 62 40 · Fax: +44 14 23 79 62 49
sales@haredata.co.uk
www.haredata.co.uk · www.leddriversuk.com

Distributors
North America

USA / CANADA

Arrow Electronics
9201 East Dry Creek Rd
Centennial, CO 80112
Tel.: US/CA: +1 855 326 4757
Tel.: EU: +800 8000 1010
leadteam@arrow.com
www.arrow.com

Components Center
3351 Edward Avenue
Santa Clara, CA 95054
Tel.: +1 800 776 08 10 · Fax: +1 408 988 69 31
e-sales@componentscenter.com
www.componentscenter.com

Components Center
11208 Young River
Fountain Valley, CA 92708
Tel.: +1 800 598 04 33 · Fax: +1 714 557 73 90
e-sales@componentscenter.com
www.componentscenter.com

Dalis Electronics
3801 E. Roeser Road, #20
Phoenix, AZ 85040
Tel.: +1 800 888 14 08 · Fax: +1 602 275 05 78
sales@daliselectronics.com
www.daliselectronics.com

Future Electronics
237 Hymus Blvd.
Pointe-Claire, Quebec H9R 50
Tel.: +1 514 694 77 10 · Fax: +1 514 695 37 07
eService@futureelectronics.com
www.futureelectronics.com

Vale Distribution
2 Linda Lane, Suite B
Vincentown, NJ 08088
Tel.: +1 800 606 82 53 · Fax: +1 609 859 87 59
alan@valedistro.com
www.valedistro.com

NOTES

FRIWO Gerätebau GmbH
Von-Liebig-Straße 11 · 48346 Ostbevern, Germany
Tel.: +49 2532 81-0 · www.friwo.com