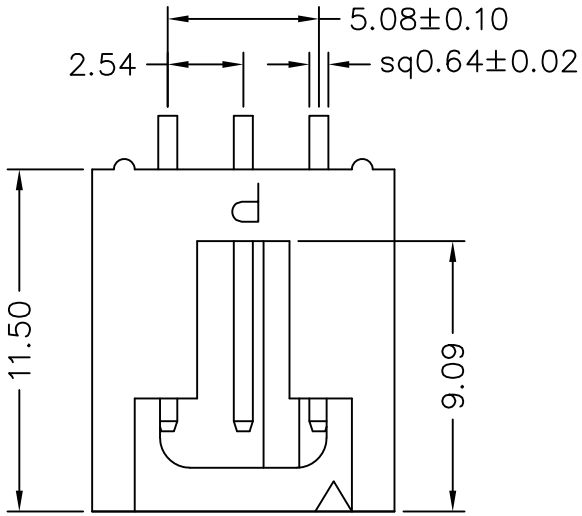

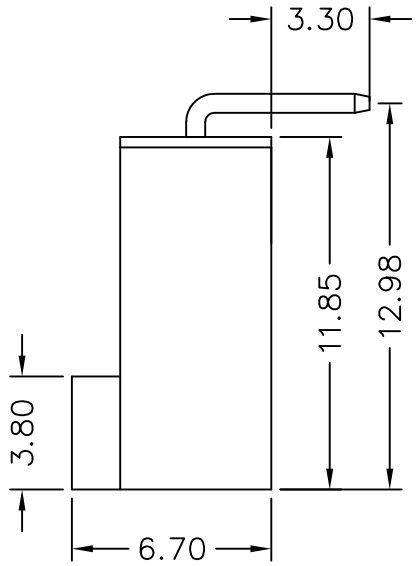

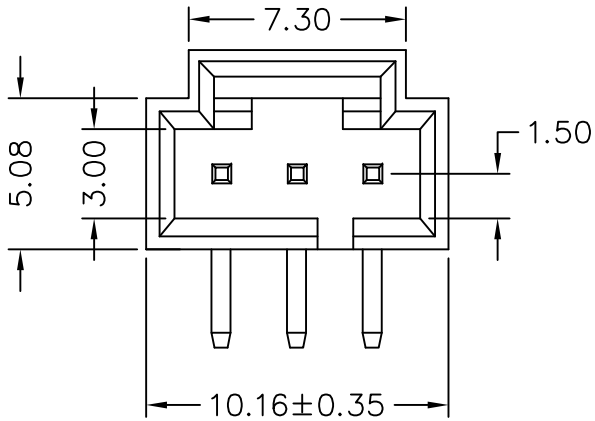

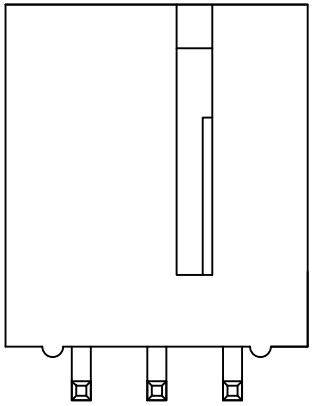

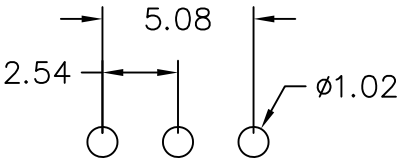

Recommended P.C.B Layout

MATERIAL

Insulator: NY66+30%G.F UL94-V0

Contact Pin : Brass

SPECIFICATION

Current Rate : 3 AMP

Insulation Resistance : 1000mΩMin. at DC 500V

Contact Resistance : 30mΩMax. at DC 100mA

Dielectric Voltage : 500V AC for one minute

Operation Temperature : -40°C to +105°C

209-8 1- 03 T B 2 0

1 2 3 4 5 6 7

1. 8: Green Product
2. 0: 180°
   1: 90°
3. No. of contacts per row
4. T: Tin plated
5. B: Black Insulator
6. 2: W/O post & W/O stand off
7. Pinrex internal code.

文管中心
2023.08.02
发行章

REV.	DESCRIPTION	DATE
A	RELEASE	2023/08/01

TOLERANCE
.0 =±.50
.00 =±.30
.000 =±.XXX
.0000=±.
ANG.=±3°

UNITS : mm

SCALE NONE | SIZE A4 | SHEET 1 OF 1 | REV. A

OLD PART NO.

DRAWER 罗黄黄 | CHECK 李剑 | APP'D 李剑

TITLE CD ROM 2.54*2.54mm
RIGHT ANGLE TYPE
W/O STAND OFF, W/O POST

NEW PART NO. 209-81-03TB20

频锐科技股份有限公司
PINREX TECHNOLOGY CORP.

DRAW NO. 209-81-03TB20