7806 ES

AC axial compact fan

ebm-papst St. Georgen GmbH & Co. KG
Hermann-Papst-Str. 1
D-78112 St. Georgen
Phone +49 (0) 7724 81-0
Fax +49 (0) 7724 81-1309
info2@de.ebmpapst.com
www.ebmpapst.com

Nominal data

Type	7806 ES	
Phase		1~
Nominal voltage	VAC	115
Frequency	Hz	60
Speed (rpm)	min^{-1}	3250
Power consumption	W	38.0
Min. ambient temperature	°C	-25
Max. ambient temperature	°C	90
Air flow	m^3/h	380
Sound power level	B	6.4
Sound pressure level	dB(A)	53

ml = Max. load · me = Max. efficiency · fa = Free air · cs = Customer specification · ce = Customer equipment
Subject to change

Downloaded from Arrow.com.

AC axial compact fan

Technical description

Weight	1.1 kg
Dimensions	Ø 150 x 55 mm
Impeller material	Sheet steel, painted black
Housing material	Die-cast aluminum
Airflow direction	Exhaust over struts
Direction of rotation	Counterclockwise, viewed toward rotor
Storage	Ball bearing
Service life L10 at 40 °C	60000 h
Service life L10 at maximum temperature	15000 h
Cable	To 2 leads. Wire ends with splice. Grounding lug for M4 x 8.
Motor protection	Protected from overload by thermal switch
Approval	VDE, CSA, UL, CE

ebm-papst St. Georgen GmbH & Co. KG · Hermann-Papst-Str. 1 · D-78112 St. Georgen · Phone +49 (0) 7724 81-0 · Fax +49 (0) 7724 81-1309 · info2@de.ebmpapst.com · www.ebmpapst.com

Downloaded from Arrow.com.

AC axial compact fan

Product drawing

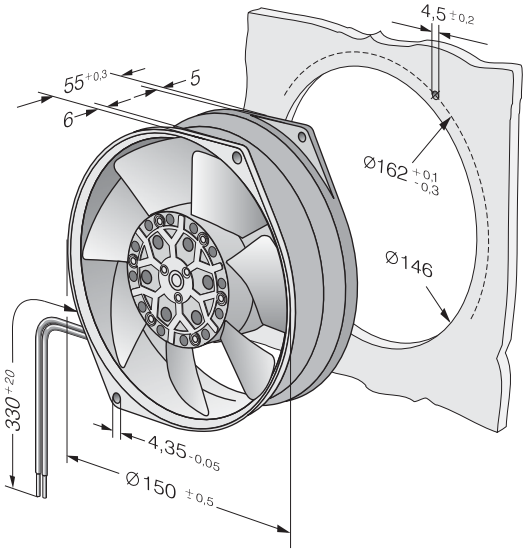

ebm-papst St. Georgen GmbH & Co. KG · Hermann-Papst-Str. 1 · D-78112 St. Georgen · Phone +49 (0) 7724 81-0 · Fax +49 (0) 7724 81-1309 · info2@de.ebmpapst.com · www.ebmpapst.com

Downloaded from Arrow.com.

AC axial compact fan

Curves: Air performance

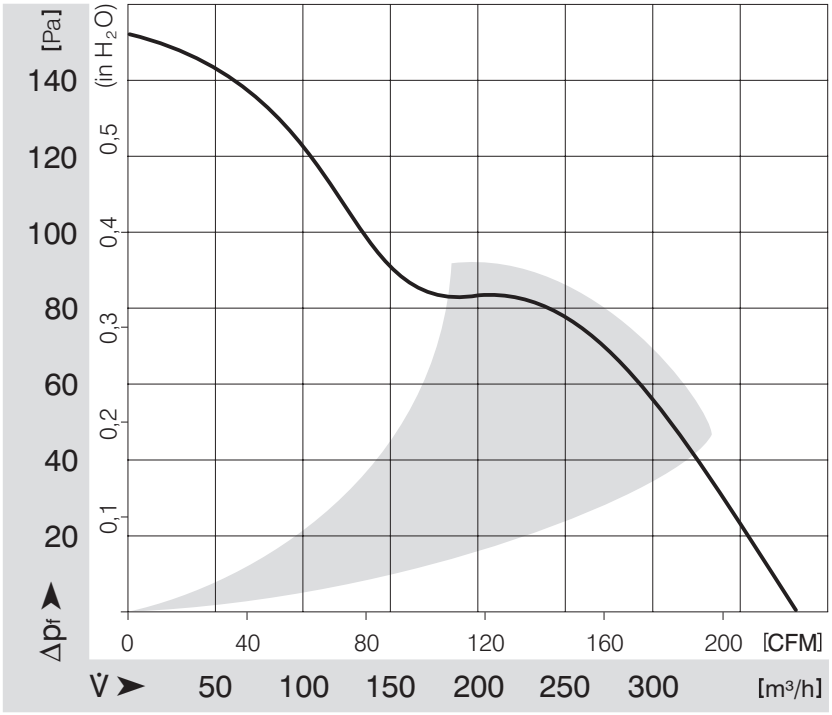

ebm-papst St. Georgen GmbH & Co. KG · Hermann-Papst-Str. 1 · D-78112 St. Georgen · Phone +49 (0) 7724 81-0 · Fax +49 (0) 7724 81-1309 · info2@de.ebmpapst.com · www.ebmpapst.com

Downloaded from Arrow.com.