TECHDOCS

Manual

WAGO-I/O-SYSTEM 750

750-325

CC-Link Fieldbus Coupler

156 kBaud ... 10 MBaud; digital and analog signals

Version 2.0.1

WAGO Kontakttechnik GmbH & Co. KG

Hansastraße 27
D-32423 Minden

Phone: +49 (0) 571/8 87 – 0
Fax: +49 (0) 571/8 87 – 1 69

E-Mail: info@wago.com

Web: www.wago.com

Technical Support

Phone: +49 (0) 571/8 87 – 4 45 55
Fax: +49 (0) 571/8 87 – 84 45 55

E-Mail: support@wago.com

Every conceivable measure has been taken to ensure the accuracy and completeness of this documentation. However, as errors can never be fully excluded, we always appreciate any information or suggestions for improving the documentation.

E-Mail: documentation@wago.com

Table of Contents

1 Notes about this Documentation

Note

Always retain this documentation!
This documentation is part of the product. Therefore, retain the documentation during the entire service life of the product. Pass on the documentation to any subsequent user. In addition, ensure that any supplement to this documentation is included, if necessary.

1.1 Validity of this Documentation

This documentation is only applicable to the “CC-Link Fieldbus Coupler” (750-325).

The product “CC-Link Fieldbus Coupler” (750-325) shall only be installed and operated according to the instructions in this manual and the system description for the WAGO-I/O-SYSTEM 750.

NOTICE

Consider power layout of the WAGO-I/O-SYSTEM 750!
In addition to these operating instructions, you will also need the system description for the WAGO-I/O-SYSTEM 750, which can be downloaded at www.wago.com. There, you can obtain important information including information on electrical isolation, system power and supply specifications.

1.2 Copyright

1.3 Symbols

⚠ DANGER

Personal Injury!
Indicates a high-risk, imminently hazardous situation which, if not avoided, will result in death or serious injury.

⚠ DANGER

Personal Injury Caused by Electric Current!
Indicates a high-risk, imminently hazardous situation which, if not avoided, will result in death or serious injury.

⚠ WARNING

Personal Injury!
Indicates a moderate-risk, potentially hazardous situation which, if not avoided, could result in death or serious injury.

⚠ CAUTION

Personal Injury!
Indicates a low-risk, potentially hazardous situation which, if not avoided, may result in minor or moderate injury.

NOTICE

Damage to Property!
Indicates a potentially hazardous situation which, if not avoided, may result in damage to property.

NOTICE

Damage to Property Caused by Electrostatic Discharge (ESD)!
Indicates a potentially hazardous situation which, if not avoided, may result in damage to property.

Note

Important Note!
Indicates a potential malfunction which, if not avoided, however, will not result in damage to property.

Information

Additional Information:
Refers to additional information which is not an integral part of this documentation (e.g., the Internet).

1.4 Number Notation

Table 1: Number Notation

Number Code	Example	Note
Decimal	100	Normal notation
Hexadecimal	0x64	C notation
Binary	'100' '0110.0100'	In quotation marks, nibble separated with dots (.)

1.5 Font Conventions

Table 2: Font Conventions

Font Type	Indicates
italic	Names of paths and data files are marked in italic-type. e.g.: *C:\Program Files\WAGO Software*
Menu	Menu items are marked in bold letters. e.g.: **Save**
>	A greater-than sign between two names means the selection of a menu item from a menu. e.g.: **File** > **New**
Input	Designation of input or optional fields are marked in bold letters, e.g.: **Start of measurement range**
“Value”	Input or selective values are marked in inverted commas. e.g.: Enter the value “4 mA” under **Start of measurement range**.
[Button]	Pushbuttons in dialog boxes are marked with bold letters in square brackets. e.g.: **[Input]**
[Key]	Keys are marked with bold letters in square brackets. e.g.: **[F5]**

2 Important Notes

This section includes an overall summary of the most important safety requirements and notes that are mentioned in each individual section. To protect your health and prevent damage to devices as well, it is imperative to read and carefully follow the safety guidelines.

2.1 Legal Bases

2.1.1 Subject to Changes

WAGO Kontakttechnik GmbH & Co. KG reserves the right to provide for any alterations or modifications. WAGO Kontakttechnik GmbH & Co. KG owns all rights arising from the granting of patents or from the legal protection of utility patents. Third-party products are always mentioned without any reference to patent rights. Thus, the existence of such rights cannot be excluded.

2.1.2 Personnel Qualifications

All sequences implemented on WAGO I/O SYSTEM 750 devices may only be carried out by electrical specialists with sufficient knowledge in automation. The specialists must be familiar with the current norms and guidelines for the devices and automated environments.

All changes to the coupler or controller should always be carried out by qualified personnel with sufficient skills in PLC programming.

2.1.3 Use of the 750 Series in Compliance with Underlying Provisions

Fieldbus couplers, controllers and I/O modules found in the modular WAGO I/O SYSTEM 750 receive digital and analog signals from sensors and transmit them to actuators or higher-level control systems. Using controllers, the signals can also be (pre-) processed.

The devices have been developed for use in an environment that meets the IP20 protection class criteria. Protection against finger injury and solid impurities up to 12.5 mm diameter is assured; protection against water damage is not ensured. Unless otherwise specified, operation of the devices in wet and dusty environments is prohibited.

Operating the WAGO I/O SYSTEM 750 devices in home applications without further measures is only permitted if they meet the emission limits (emissions of interference) according to EN 61000-6-3. You will find the relevant information in the section “Device Description” > “Standards and Guidelines” in the manual for the used fieldbus coupler or controller.

Appropriate housing (per 2014/34/EU) is required when operating the WAGO I/O SYSTEM 750 in hazardous environments. Please note that a prototype test

certificate must be obtained that confirms the correct installation of the system in a housing or switch cabinet.

The implementation of safety functions such as EMERGENCY STOP or safety door monitoring must only be performed by the F I/O modules within the modular WAGO I/O SYSTEM 750. Only these safe F I/O modules ensure functional safety in accordance with the latest international standards. WAGO's interference-free output modules can be controlled by the safety function.

2.1.4 Technical Condition of Specified Devices

The devices to be supplied ex works are equipped with hardware and software configurations, which meet the individual application requirements. These modules contain no parts that can be serviced or repaired by the user. The following actions will result in the exclusion of liability on the part of WAGO Kontakttechnik GmbH & Co. KG:

- Repairs,
- Changes to the hardware or software that are not described in the operating instructions,
- Improper use of the components.

Further details are given in the contractual agreements. Please send your request for modified and new hardware or software configurations directly to WAGO Kontakttechnik GmbH & Co. KG.

2.2 Safety Advice (Precautions)

For installing and operating purposes of the relevant device to your system the following safety precautions shall be observed:

DANGER

Do not work on devices while energized!
All power sources to the device shall be switched off prior to performing any installation, repair or maintenance work.

DANGER

Install device in only one suitable enclosure!
The device is an open system. Install the device in a suitable enclosure. This enclosure must:

- Guarantee that the max. permissible degree of pollution is not exceeded.
- Offer adequate protection against contact.
- Prevent fire from spreading outside of the enclosure.
- Offer adequate protection against UV irradiation.
- Guarantee mechanical stability
- Restrict access to authorized personnel and may only be opened with tools

DANGER

Ensure disconnect and overcurrent protection!
The device is intended for installation in automation technology systems. Disconnect protection is not integrated. Connected systems must be protected by a fuse.
Provide suitable disconnect and overcurrent protection on the system side!

DANGER

Ensure a standard connection!
To minimize any hazardous situations resulting in personal injury or to avoid failures in your system, the data and power supply lines shall be installed according to standards, with careful attention given to ensuring the correct terminal assignment. Always adhere to the EMC directives applicable to your application.

DANGER

Use SELV power source only!
The fieldbus coupler/controller must only be powered from a SELV (Safety Extra Low Voltage) power source.

NOTICE

Do not use in telecommunication circuits!
Only use devices equipped with ETHERNET or RJ-45 connectors in LANs. Never connect these devices with telecommunication networks.

NOTICE

Ensure proper contact with the DIN-rail!
Proper electrical contact between the DIN-rail and device is necessary to maintain the EMC characteristics and function of the device.

NOTICE

Replace defective or damaged devices!
Replace defective or damaged device/module (e.g., in the event of deformed contacts).

NOTICE

Protect the components against materials having seeping and insulating properties!
The components are not resistant to materials having seeping and insulating properties such as: aerosols, silicones and triglycerides (found in some hand creams). If you cannot exclude that such materials will appear in the component environment, then install the components in an enclosure being resistant to the above-mentioned materials. Clean tools and materials are imperative for handling devices/modules.

NOTICE

Clean only with permitted materials!
Clean housing and soiled contacts with propanol.

NOTICE

Do not use any contact spray!
Do not use any contact spray. The spray may impair contact area functionality in connection with contamination.

NOTICE

Do not reverse the polarity of connection lines!
Avoid reverse polarity of data and power supply lines, as this may damage the devices involved.

NOTICE

Avoid electrostatic discharge!
The devices are equipped with electronic components that may be destroyed by electrostatic discharge when touched. Please observe the safety precautions against electrostatic discharge per DIN EN 61340-5-1/-3. When handling the devices, please ensure that environmental factors (personnel, work space and packaging) are properly grounded.

3 System Description

The WAGO-I/O-SYSTEM 750 is a modular, fieldbus-independent input/output system (I/O system). The configuration described here consists of a fieldbus coupler/controller (1) and the modular I/O modules (2) for any signal shapes that form the fieldbus node together. The end module (3) completes the node and is required for correct operation of the fieldbus node.

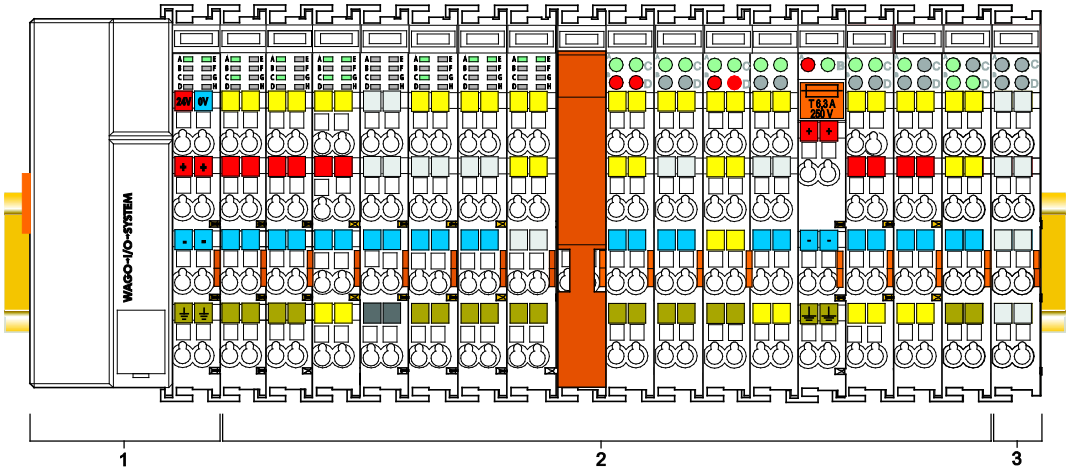

Figure 1: Fieldbus Node (Example)

Fieldbus couplers/controllers are available for different fieldbus systems.

The extended ECO fieldbus couplers contain the fieldbus interface, electronics and a power supply terminal. The fieldbus interface forms the physical interface to the relevant fieldbus. The electronics process the data of the bus modules and make it available for the fieldbus communication. The 24 V system supply and the 24 V field supply are fed in via the integrated power supply terminal.

The fieldbus coupler/controller communicates via the relevant fieldbus. The programmable fieldbus controller (PFC) enables the implementation of additional PLC functions. Programming is done with the WAGO-I/O-*PRO* in accordance with IEC 61131-3.

I/O modules for diverse digital and analog I/O signals as well as special functions can be connected to the fieldbus coupler/controller. The communication between the fieldbus coupler/controller and the I/O modules is carried out via a local bus.

The components of the WAGO I/O SYSTEM 750 have clear termination points, light emitting diodes for status display, plug-in mini WSB tags and group marker cards for labeling.

The 1, 2 or 3 wire technology supplemented by a ground wire connection allows for direct sensor or actuator wiring.

3.1 Manufacturing Number

The serial number indicates the delivery status directly after production. This number is part of the labeling on the side of each component.

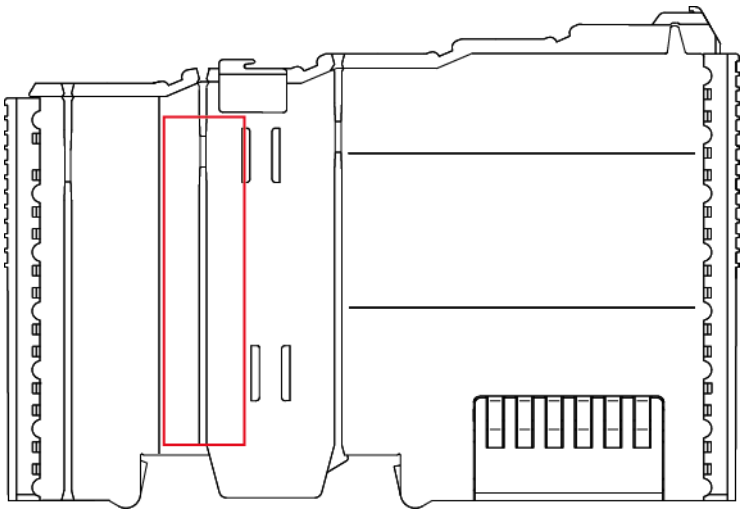

Figure 2: Marking Area for Serial Numbers

There are two serial numbers in two rows in the side marking. They are left of the release tab. The first 10 positions in the longer row of the serial numbers contain version and date identifications.

Example structure of the rows: 0114010101…

01	**14**	**01**	**01**	**01**	**(additional positions)**
WW	**YY**	**FW --**	**HW**	**FL**	**-**
Calendar week	Year	Firmware version	Hardware version	Firmware loader version	Internal information

The row order can vary depending on the production year, only the longer row is relevant. The back part of this and the shorter row contain internal administration information from the manufacturer.

In addition, the serial number is printed on the front on the cover cap of the service interface, so that it can also be read when installed.

3.2 Update

For products that can be updated, the side inscription has a prepared matrix in which the current update data can be entered in columns.

Up to 2015, the matrix has rows to enter the “NO” work order number (or “BA” to CW 13/2004), “DS” update date, “SW” software index (optional), “HW” hardware index and “FWL” firmware loader index (optional).

NO			
DS			
SW			
HW			
FWL			

Figure 3: Update Matrix up to 2015

From 2016, the matrix has rows to enter the “FA” production or work order number and to enter the “PD” production date and “AZ” item number.

FA	XXXXXXXXXX	
PD	WWJJ	
AZ	FWHWFL	

Figure 4: Update Matrix from 2016

Table 3: Legend for Figure “Update Matrix from 2016”

	Description
FA	Production order number, 10-digit
PD	KW = calendar week YY = year
AZ	FW = firmware index HW = hardware index FL = firmware loader index

For factory updates to a head station, the current production or work order number is also printed on the cover cap of the service interface.

The original manufacturing information on the product housing remains unchanged.

3.3 Storage, Assembly and Transport

Whenever possible, the components are to be stored in their original packaging. Likewise, the original packaging provides optimal protection during transport.

When assembling or repacking the components, the contacts must not be soiled or damaged. The components must be stored and transported in appropriate containers/packaging. Thereby, the ESD information is to be regarded.

3.4 Assembly Guidelines/Standards

- DIN 60204 Electrical equipment of machines
- DIN EN 50178 Electronic equipment for use in power installations (replacement for VDE 0160)
- EN 60439 Low-voltage switchgear and controlgear assemblies

3.5 Power Supply

3.5.1 Overcurrent Protection

⚠ WARNING

Possible fire hazard due to insufficient overcurrent protection!
In the event of a fault, insufficient overcurrent protection can present a possible fire hazard. In the event of a fault, excessive current flow in the components can cause significant overheating. Therefore, you should always dimension the overcurrent protection according to the anticipated power usage.

The system and field voltage of the WAGO-I/O-SYSTEMs 750 is supplied on the head stations and bus supply modules.
For components that work with extra low voltage, only SELV/PELV voltage sources should be used.

A single voltage source supplying multiple components must be designed according to the component with the strictest electrical safety requirements.
For components which are only allowed to be supplied by SELV voltage sources, these requirements are listed in the technical data.

Most components in the WAGO-I/O-SYSTEM 750 have no internal overcurrent protection. Therefore, appropriate overcurrent production must always be implemented externally for the power supply to these components, e.g. via fuses. The maximum permissible current is listed in the technical data of the components used.

NOTICE

System supply only with appropriate fuse protection!
Without overcurrent protection, the electronics can be damaged.
If you implement the overcurrent protection for the system supply with a fuse, a fuse, max. 2 A, slow-acting, should be used.

NOTICE

Field supply only with appropriate fuse protection!
Without overcurrent protection, the electronics can be damaged.
If you alternatively implement the overcurrent protection for the field supply with an external fuse, a 10 A fuse should be used.

3.5.2 Isolation

Within the fieldbus node, there are three electrically isolated potentials:

- Electrically isolated fieldbus interface via transformer

- Electronics of the fieldbus couplers/controllers and the I/O modules (local bus)
- All I/O modules have an electrical isolation between the electronics (local bus, logic) and the field electronics. Some digital and analog input modules have each channel electrically isolated, please see catalog.

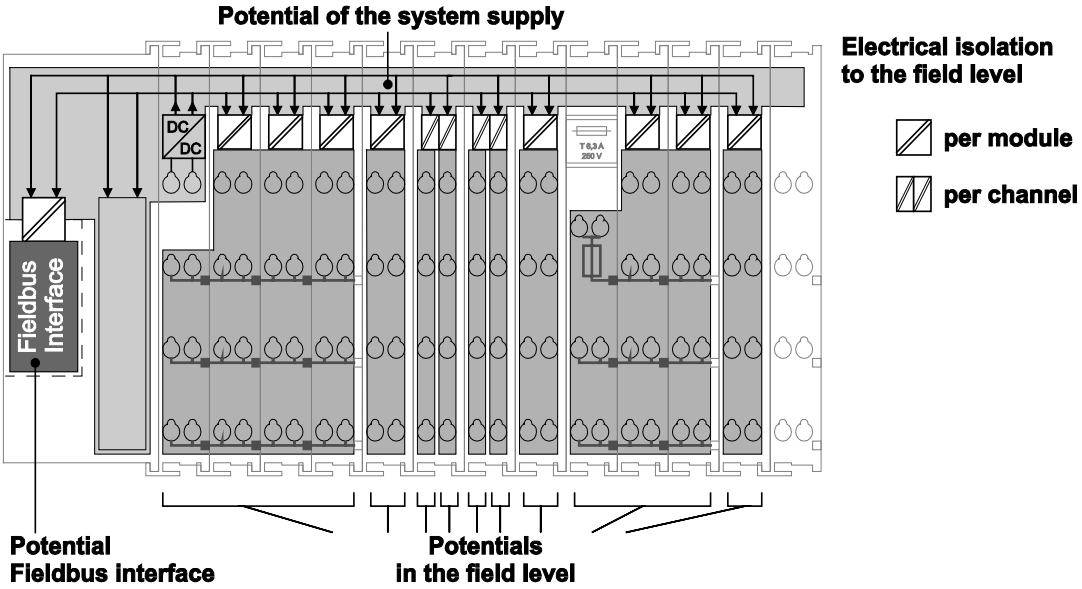

Figure 5: Isolation for Fieldbus Couplers/Controllers (Example)

3.5.3 System Supply

3.5.3.1 Connection

The WAGO-I/O-SYSTEM 750 requires a 24 V direct current system supply. The power supply is provided via the fieldbus coupler/controller and, if necessary, in addition via internal system supply modules 750-613. The power supply is reverse voltage protected.

NOTICE

Do not use an incorrect voltage/frequency!
The use of an incorrect supply voltage or frequency can cause severe damage to the components.

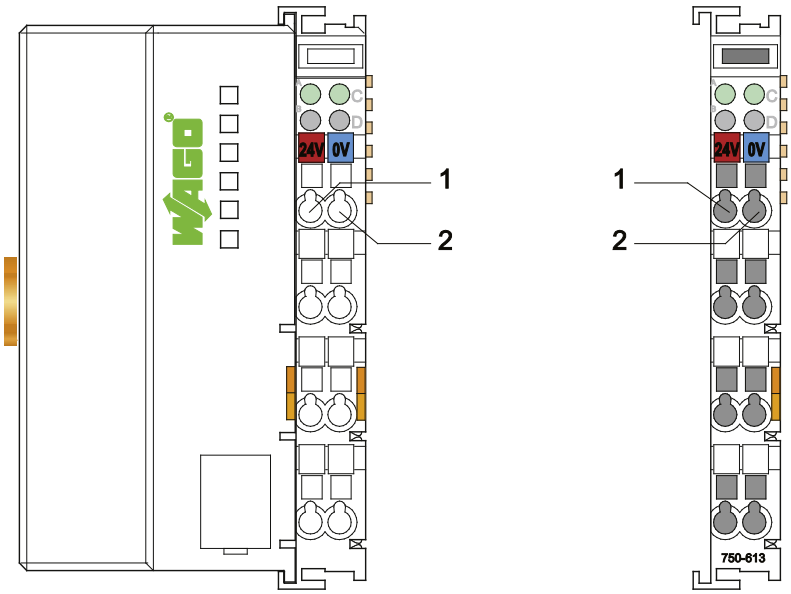

Figure 6: System Supply via Fieldbus Coupler/Controller (left) and via Internal System Supply Module (right)

Table 4: Legend for Figure “System Supply via Fieldbus Coupler/Controller (left) and via Internal System Supply Module (right)”

Position	Description
1	System supply DC 24 V (-25 % … +30 %)
2	System supply 0 V

The fed-in 24 VDC supplies all internal system components, e.g. fieldbus coupler/controller electronics, fieldbus interface and I/O modules via the local bus (5 VDC system voltage). The 5 VDC system voltage is galvanically connected to the 24 VDC supply voltage.

NOTICE

System supply only with appropriate fuse protection!
Without overcurrent protection, the electronics can be damaged.
If you implement the overcurrent protection for the system supply with a fuse, a fuse, max. 2 A, slow-acting, should be used.

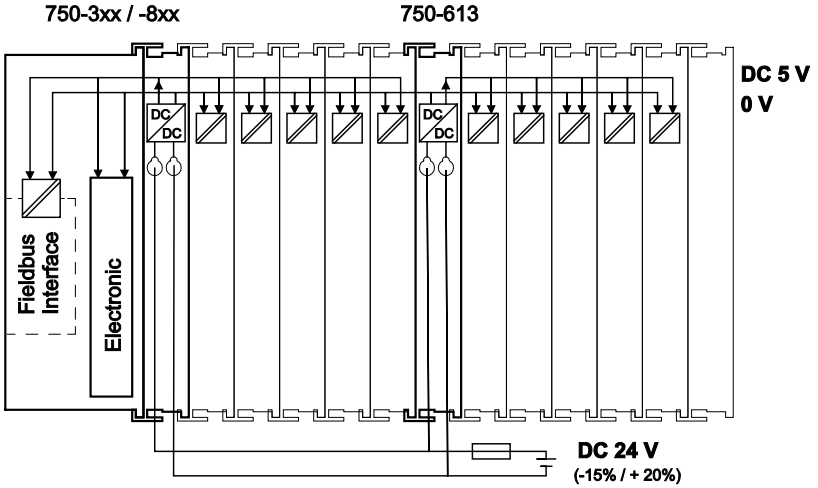

Figure 7: System Voltage for Standard Couplers/Controllers and Extended ECO Couplers

Note

Only reset the system simultaneously for all supply modules!
Reset the system by switching the system supply simultaneously at all supply modules (fieldbus coupler/controller and potential supply module with bus power supply) off and on again.

3.5.3.2 Dimensioning

Note

Recommendation
A stable power supply cannot always be assumed. Therefore, you should use regulated power supplies to ensure the quality of the supply voltage.

The supply capacity of the fieldbus coupler/controller or the internal system supply module can be taken from the technical data of the components.

Table 5: Alignment

Internal current consumption[*)]	Current consumption via system voltage (5 V for electronics of I/O modules and fieldbus coupler/controller).
Total current for I/O modules[*)]	Available current for the I/O modules. Provided by the bus power supply unit. See fieldbus coupler/controller and internal system supply module

[*)] See current catalog, manuals, Internet

Example:

Calculating the current consumption on an Example Coupler:

Internal current consumption	380 mA at 5 V
Residual current for bus modules	1620 mA at 5 V
Sum $I_{(5\ V)\ total}$	**2000 mA at 5V**

The internal current consumption is indicated in the technical data for each bus terminal. In order to determine the total requirement, add together the values of all I/O modules in the node.

Note

Please note the aggregate current for I/O modules. It may be necessary to supply potential!
When the sum of the internal current consumption for the I/O modules exceeds their aggregate current, you must use a supply module with bus power supply. Install it before the position where the permissible aggregate current would be exceeded.

Example:

Calculating the total current on the example coupler described above:

A node with the example coupler, which is described above, consists of:
20 relay modules (750-517) and 10 digital input modules (750-405).

Internal current consumption	20 × 90 mA =	1800 mA at 5 V
	+ 10 × 2 mA =	20 mA at 5 V
Sum		**1820 mA at 5 V**

The example coupler can only provide 1620 mA (see previous example) for the I/O modules. This value is given in the associated data sheet. Consequently, an internal system supply module with bus power supply (750-613), e. g. in the middle of the node, should be added.

Note

Recommendation
Utilize the **smartDESIGNER** feature WAGO ProServe® software to configure fieldbus node assembly. You can test the configuration via the integrated plausibility check.

The maximum input current of the 24 V system supply is 500 mA. The exact electrical consumption ($I_{(V)}$) can be determined with the following formulas:

Fieldbus coupler or controller

$I_{(5\ V)\ total}$ = Sum of all the internal current consumption of the connected I/O modules + internal current consumption of the fieldbus coupler/controller

Internal system supply module

$I_{(5\ V)\ total}$ = Sum of all the internal current consumption of the connected I/O modules at internal system supply module

$$\text{Input current } I_{(24\ V)} = \frac{5\ V}{24\ V} \times \frac{I_{(5\ V)\ total}}{\eta}$$

$\eta = 0.87$
(87 % Efficiency of the power supply at nominal load 24 V)

Note

Activate all outputs when testing the current consumption!
If the electrical consumption of a power supply point for the 24 V system supply exceeds 500 mA, then the cause may be an improperly dimensioned node or a defect.
During the test, you must activate all outputs.

3.5.4 Field Supply

3.5.4.1 Connection

Sensors and actuators can be directly connected to the relevant channel of the I/O module in 1, 2, 3 or 4 conductor connection technology. The I/O module supplies power to the sensors and actuators. The input and output drivers of some I/O modules require the field side supply voltage.

The fieldbus coupler/controller provides field side power (DC 24 V). In this case it is a passive power supply without protection equipment.

Power supply modules with or without fuse holder and diagnostic capability are available for the power supply of other field potentials (24 VDC, 0 … 230 VAC/DC, 120 VAC, 230 VAC). The power supply modules can also be used to set up various potential groups. The connections are connected in pairs to a power contact.

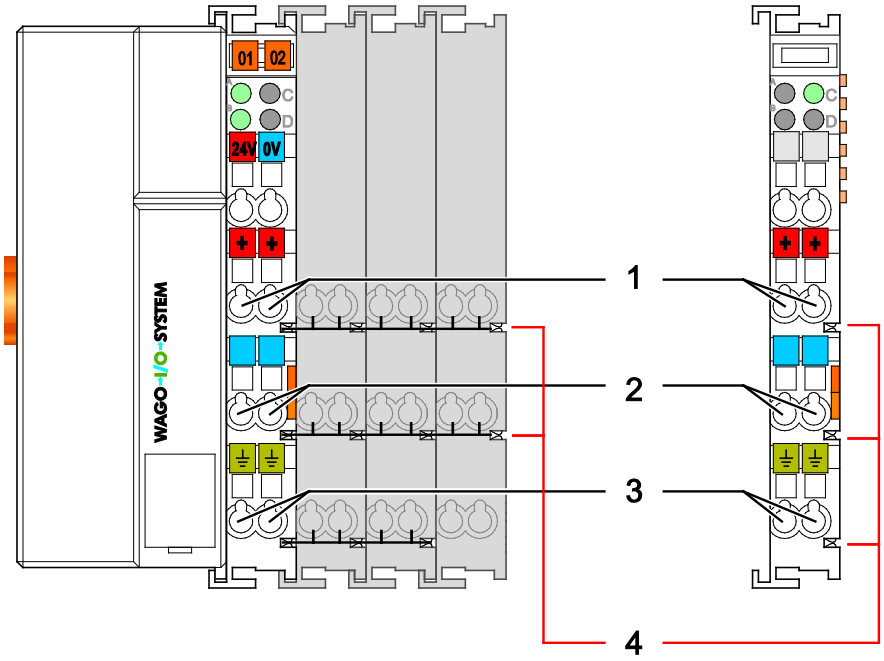

Figure 8: Field Supply for Standard Couplers/Controllers and Extended ECO Couplers

Table 6: Legend for Figure “Field Supply for Standard Couplers/Controllers and Extended ECO Couplers”

Field supply	
1	24 V (-15 % / +20 %)
2	0 V
3	Optional ground potential (functional earth)
Power jumper contacts	
4	Potential distribution to adjacent I/O modules

The field-side power supply is automatically derived from the power jumper contacts when snapping an I/O module.

The current load of the power contacts must not exceed 10 A on a continual basis.

By inserting an additional power supply module, the field supply via the power contacts is disrupted. From there a new power supply occurs which may also contain a new voltage potential.

Note

Re-establish the ground connection when the connection to the power jumper contacts is disrupted!
Some I/O modules have no or very few power contacts (depending on the I/O function). Due to this, the passing through of the relevant potential is disrupted. If you require a field supply via power jumper contacts for subsequent I/O modules, then you have to use a power supply module.
Note the data sheets of the I/O modules.

Note

Use a spacer module when setting up a node with different potentials!
In the case of a node setup with different potentials, e.g. the alteration from 24 VDC to 230 VAC, you should use a spacer module. The optical separation of the potentials acts as a warning to heed caution in the case of wiring and maintenance works. Thus, you can prevent the results of wiring errors.

3.5.4.2 Fusing via Power Supply Module

Internal fusing of the field supply is possible for various field voltages via an appropriate power supply module.

Table 7: Power Supply Modules

Order No.	Field Voltage
750-601	24 VDC, Supply/Fuse
750-609	230 VAC, Supply/Fuse
750-615	120 VAC, Supply/Fuse
750-617	24 VAC, Supply/Fuse
750-610	24 VDC, Supply/Fuse/Diagnosis
750-611	230 VAC, Supply/Fuse/Diagnosis
750-606	Supply Module 24 VDC, 1.0 A, Ex i
750-625/000-001	Supply Module 24 VDC, 1.0 A, Ex i (without diagnostics)

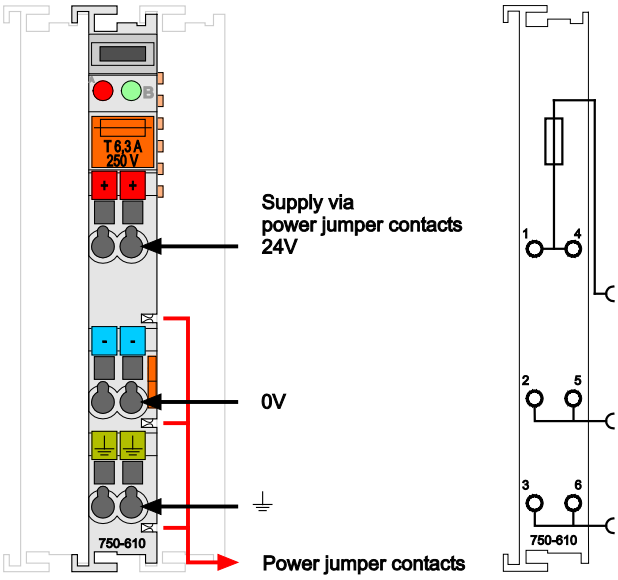

Figure 9: Supply Module with Fuse Carrier (Example 750-610)

NOTICE

Observe the maximum power dissipation and, if required, UL requirements!
In the case of power supply modules with fuse holders, you must only use fuses with a maximum dissipation of 1.6 W (IEC 127).
For UL approved systems only use UL approved fuses.

In order to insert or change a fuse, or to switch off the voltage in succeeding I/O modules, the fuse holder may be pulled out. In order to do this, use a screwdriver for example, to reach into one of the slits (one on both sides) and pull out the holder.

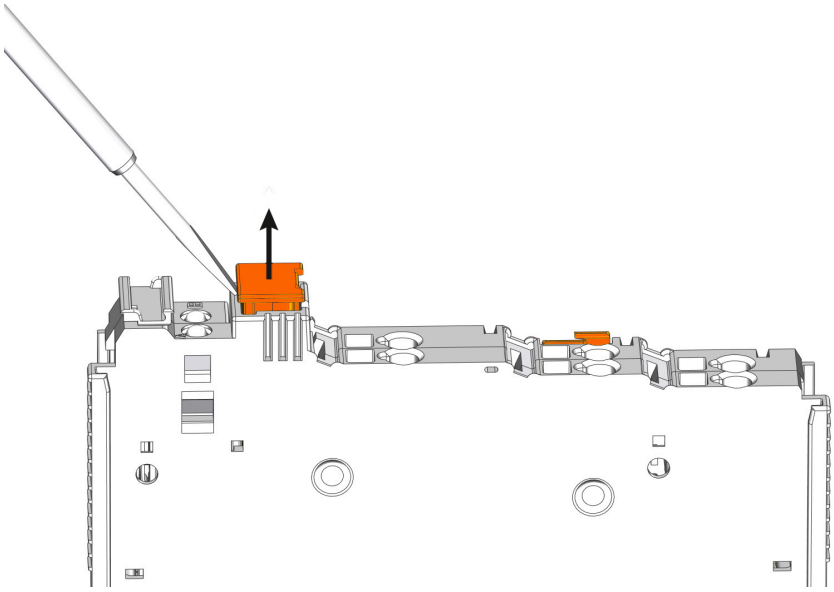

Figure 10: Removing the Fuse Carrier

Lifting the cover to the side opens the fuse carrier.

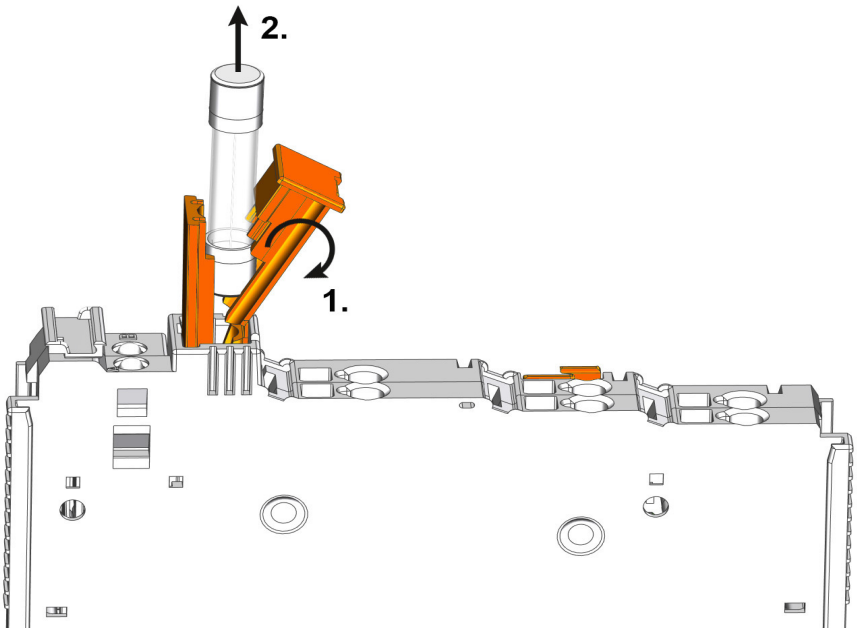

Figure 11: Opening the Fuse Carrier and Changing the Fuse

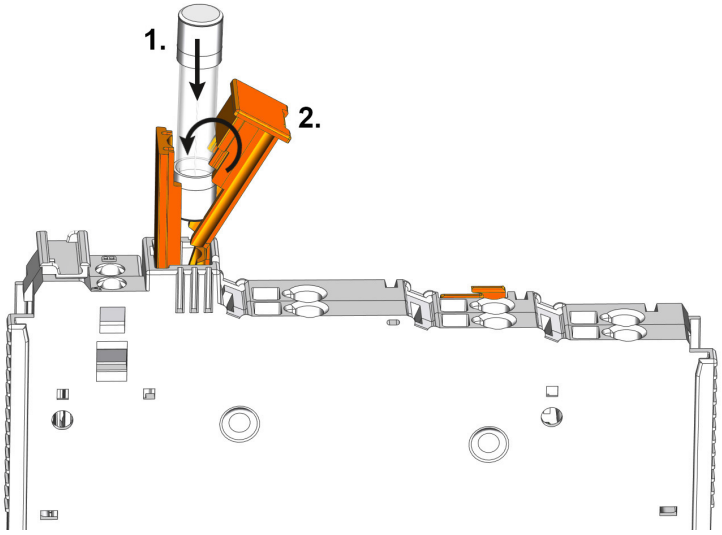

Figure 12: Changing the Fuse and Closing the Fuse Carrier

After changing the fuse, the fuse carrier is pushed back into its original position.

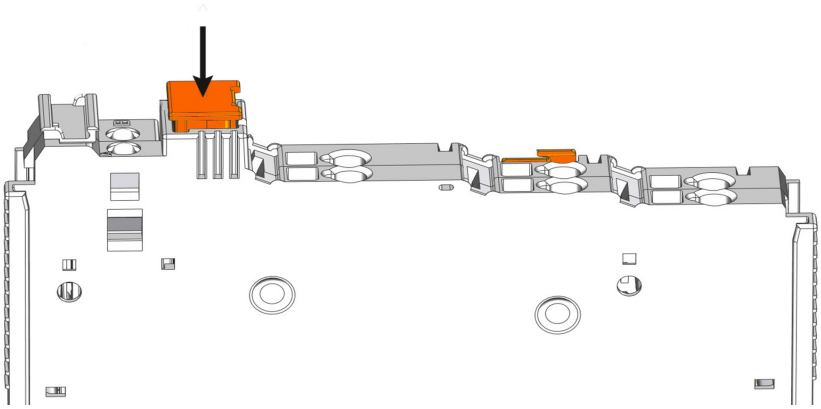

Figure 13: Push Back the Fuse Carrier

3.5.4.3 Fusing External

NOTICE

Field supply only with appropriate fuse protection!
Without overcurrent protection, the electronics can be damaged.
If you alternatively implement the overcurrent protection for the field supply with an external fuse, an F 10 A fuse should be used.

For the external fusing, the fuse modules of the WAGO series 282, 2006, 281 and 2002 are suitable for this purpose.

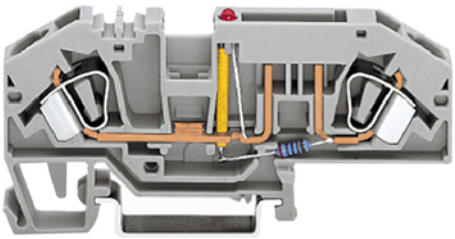

Figure 14: Fuse Modules for Automotive Fuses, Series 282

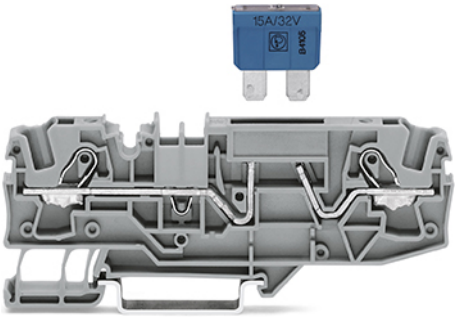

Figure 15: Fuse Modules for Automotive Fuses, Series 2006

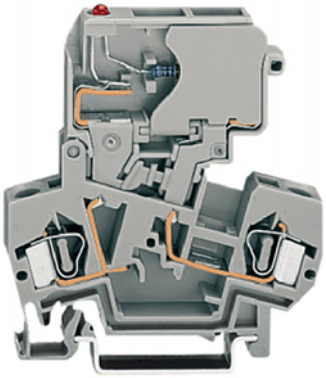

Figure 16: Fuse Modules with Pivotable Fuse Carrier, Series 281

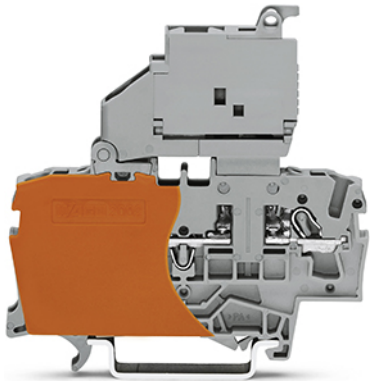

Figure 17: Fuse Modules with Pivotable Fuse Carrier, Series 2002

3.5.5 Supplementary Power Supply Regulations

The WAGO-I/O-SYSTEM 750 can also be used in shipbuilding or offshore and onshore areas of work (e. g. working platforms, loading plants). This is demonstrated by complying with the standards of influential classification companies such as Germanischer Lloyd and Lloyds Register.

Filter modules for 24 V supply are required for the certified operation of the system.

Table 8: Filter Modules for 24 V Supply

Order No.	Name	Description
750-626	Supply Filter	Filter module for system supply and field supply (24 V, 0 V), i. e. for fieldbus coupler/controller and bus power supply (750-613)
750-624	Supply Filter	Filter module for the 24 V field supply (750-602, 750-601, 750-610)

Therefore, the following power supply concept must be absolutely complied with.

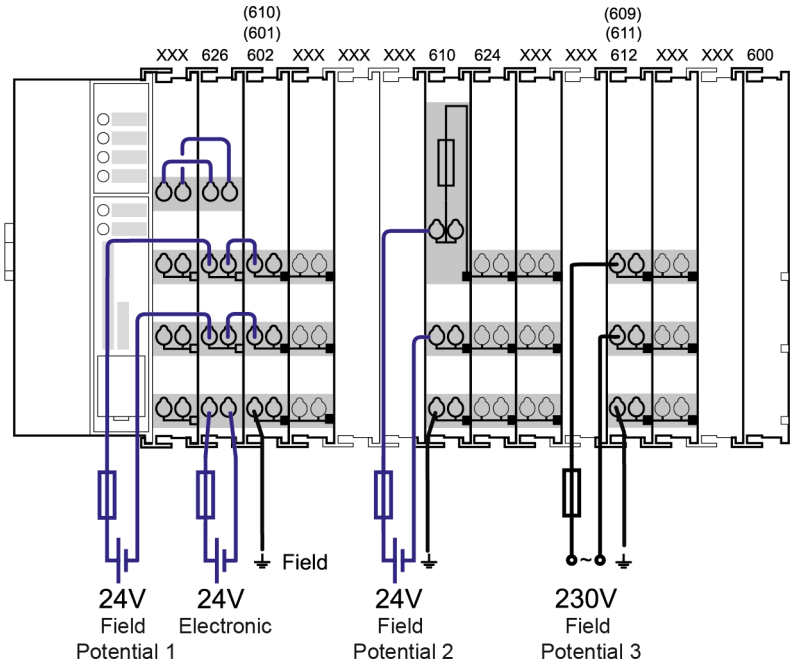

Figure 18: Power Supply Concept

Note

Use a supply module for equipotential bonding!
Use an additional 750-601/ 602/ 610 Supply Module behind the 750-626 Filter Module if you want to use the lower power jumper contact for equipotential bonding, e.g., between shielded connections and require an additional tap for this potential.

3.5.6 Supply Example

Note

The system supply and the field supply shall be separated!
You should separate the system supply and the field supply in order to ensure bus operation in the event of a short-circuit on the actuator side.

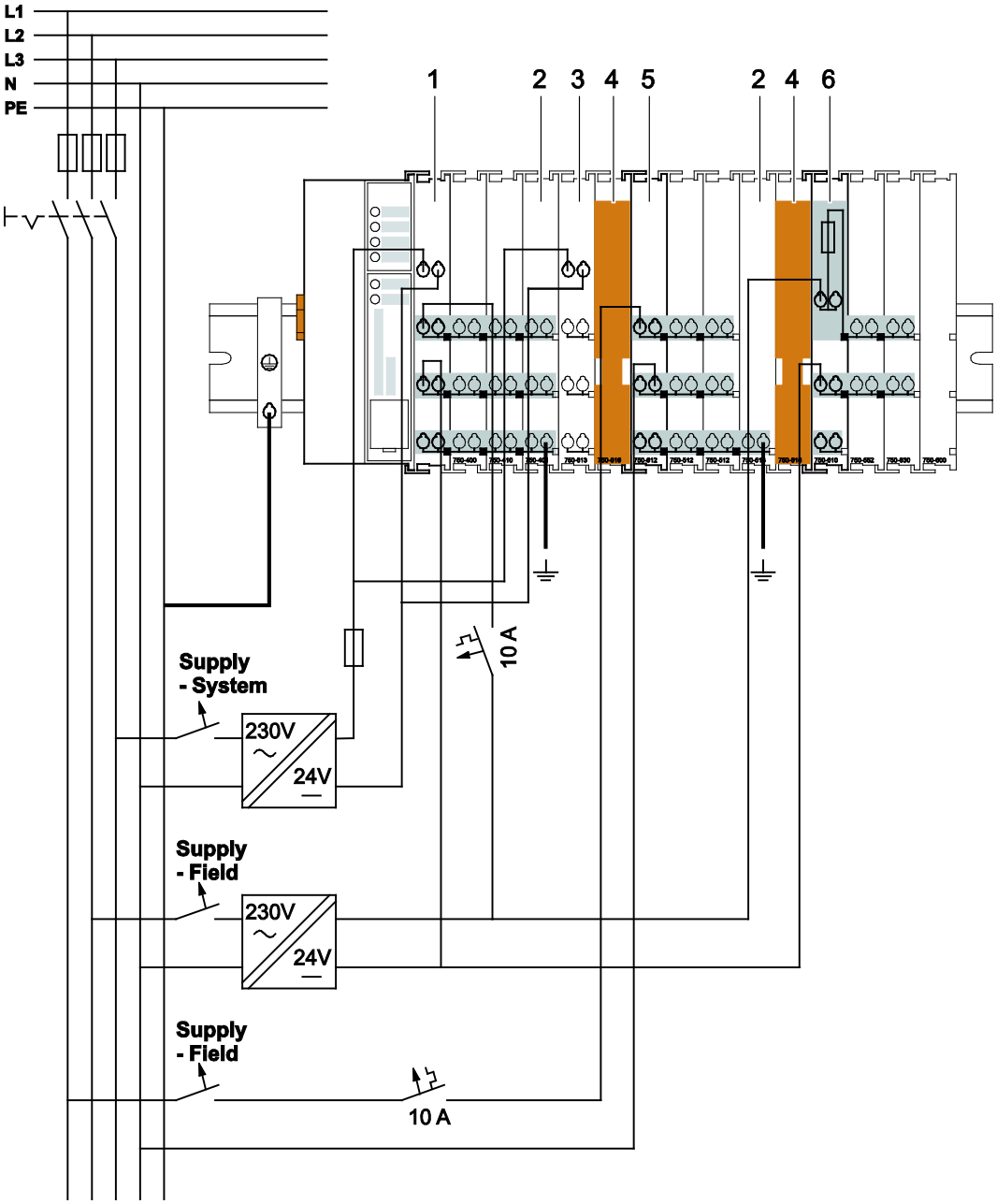

Figure 19: Supply Example for Standard Couplers/Controllers

Table 9: Legend for Figure “Supply Example for Fieldbus Coupler/Controller”

Pos.	Description
1	Power Supply on fieldbus coupler/controller via external Supply Module
2	Power Supply with optional ground
3	Internal System Supply Module
4	Separation Module recommended
5	Supply Module passive
6	Supply Module with fuse carrier/diagnostics

3.5.7 Power Supply Unit

The WAGO-I/O-SYSTEM 750 requires a 24 VDC voltage (system supply).

Note

Recommendation
A stable power supply cannot always be assumed everywhere. Therefore, you should use regulated power supplies to ensure the quality of the supply voltage.

Note

Buffer for system power supply!
The system power supply must be buffered to bridge power outages. As the power demand depends on the respective node configuration, buffering is not implemented internally.
To achieve power outages of 1 ms to 10 ms according to IEC61131-2, determine the buffering appropriate for your node configuration and structure it as an external circuit.

The power demand must be determined individually depending on the entry point of the field supply. All loads through field devices and I/O modules must be taken into account. The field supply also impacts the I/O modules because the input and output drivers of some I/O modules require the voltage of the field supply.

Note

System and field supply must be isolated!
The system supply and field supply must be isolated to ensure bus operation in the event of short circuits on the actuator side.

Information

Power supply units are available in the eShop.
You can find suitable power supply units, e. g. from the EPSITRON series, in the eShop on www.wago.com.

3.6 Grounding

3.6.1 Grounding the DIN Rail

3.6.1.1 Framework Assembly

When setting up the framework, the carrier rail must be screwed together with the electrically conducting cabinet or housing frame. The framework or the housing must be grounded. The electrical connection is established via the screw. Thus, the carrier rail is grounded.

DANGER

Ensure sufficient grounding is provided!
You must take care to ensure the flawless electrical connection between the carrier rail and the frame or housing in order to guarantee sufficient grounding.

3.6.1.2 Insulated Assembly

Insulated assembly has been achieved when there is constructively no direct ohmic contact between the cabinet frame or machine parts and the carrier rail. Here, the earth ground must be set up via an electrical conductor in accordance with valid national safety regulations.

Note

Recommendation
The optimal setup is a metallic assembly plate with grounding connection which is electrically conductive linked to the carrier rail.

The separate grounding of the carrier rail can be easily set up with the aid of the WAGO ground wire terminals.

Table 10: WAGO Ground Wire Terminals

Order No.	Description
283-609	1-conductor ground (earth) terminal block make an automatic contact to the carrier rail; conductor cross section: 0.2 mm² … 16 mm² **Note**: Also order the end and intermediate plate (283-320).

3.6.2 Grounding Function

The grounding function increases the resistance against electro-magnetic interferences. Some components in the I/O system have a carrier rail contact that dissipates electro-magnetic interferences to the carrier rail.

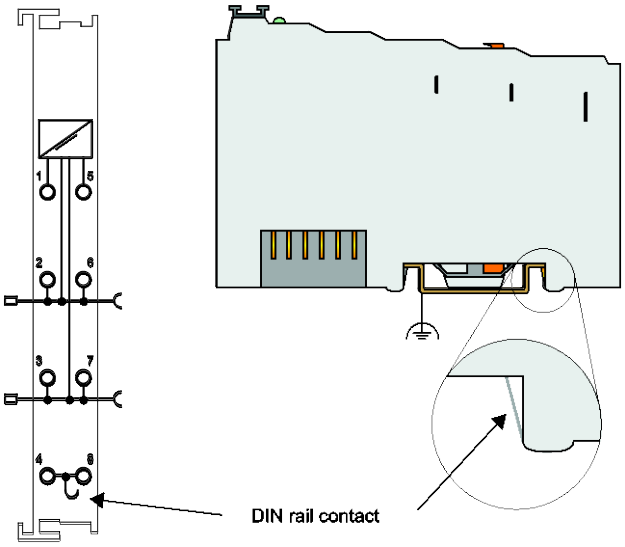

Figure 20: Carrier Rail Contact (Example)

DANGER

Ensure sufficient grounding is provided!
You must take care to ensure the direct electrical connection between the carrier rail contact and the carrier rail.
The carrier rail must be grounded.
For information on carrier rail properties, see section “Mounting” > … > “Carrier Rail Properties”.

The bottom CAGE CLAMP® connectors of the supply modules enable optional connection of a field-side functional ground. This potential is made available to the I/O module arranged on the right through the spring-loaded contact of the three power contacts. Some I/O modules are equipped with a knife-edge contact that taps this potential. This forms a potential group with regard to functional ground with the I/O module arranged on the left.

3.7 Shielding

3.7.1 General

Use of shielded cables reduces electromagnetic interference and thus increases signal quality. Measurement errors, data transmission errors and interference due to excessive voltage can be prevented.

Note

Connect the cable shield to the ground potential!
Integrated shielding is mandatory to meet the technical specifications in regards to measuring accuracy. Connect the cable shield and ground potential at the inlet to the cabinet or housing. This allows induced interference to dissipate and to be kept away from devices in the cabinet or housing.

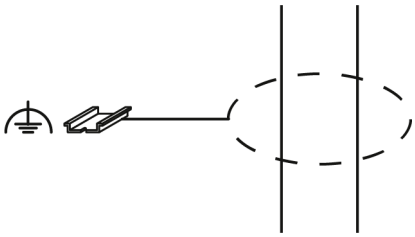

Figure 21: Cable Shield at Ground Potential

Note

Improve shielding performance by placing the shield over a large area!
Higher shielding performance is achieved via low-impedance connection between shield and ground. For this purpose, connect the shield over a large surface area, e.g., WAGO shield connecting system. This is especially recommended for large-scale systems where equalizing current or high impulse-type currents caused by atmospheric discharge may occur.

Note

Keep data and signal lines away from sources of interference!
Route data and signal lines separately from all high voltage cables and other sources of high electromagnetic emission (e.g., frequency converter or drives).

3.7.2 Fieldbus Cables

The shielding of fieldbus lines is described in the respective configuration guidelines and standards of the fieldbus system. Information on this can be provided by the corresponding fieldbus organization or specialist literature.

3.7.3 Shielded Signal Lines

Note

Use shielded signal lines!
Always use shielded signal lines for analog signals and I/O modules which are equipped with shield clamps. Only then you can ensure that the accuracy and interference immunity specified for the respective I/O module can be achieved even in the presence of interference acting on the signal cable.

On some WAGO devices you can directly clamp the shield. For all other devices use the WAGO shield connecting system.

3.7.4 WAGO Shield Connecting System

The series 790 WAGO shield connecting system consists of shield clamping saddles, busbars and various mounting carriers. These components can be used to achieve many different configurations.

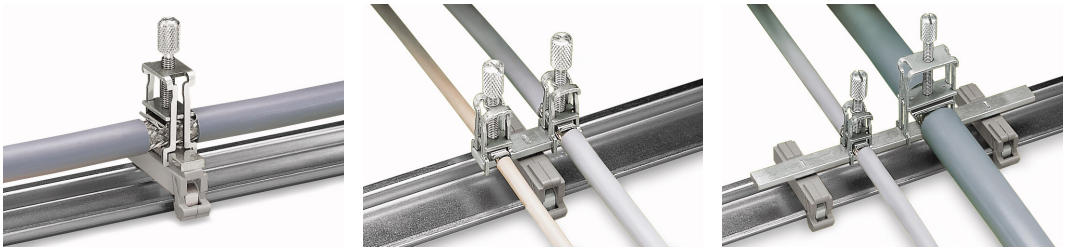

Figure 22: Examples of the WAGO Shield Connecting System

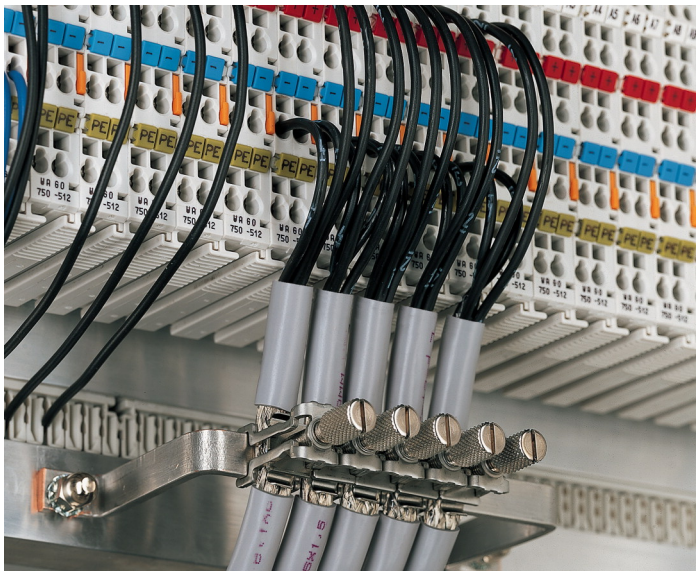

Figure 23: Application of the WAGO Shield Connecting System

4 Device Description

The 750-325 CC-Link Fieldbus Coupler connects the WAGO-I/O-SYSTEM with the CC-Link protocol.

In the head station, all input signals from the sensors are combined. After connecting the head station, the head station determines which I/O modules are on the node and creates a local process image from theirs data. Analog and specialty module data is sent via words and/or bytes; digital data is grouped bit-by-bit.

The data of the analog modules is mapped first into the process image. The modules are mapped in the order of their physical position after the head station.

The bits of the digital modules are combined into words and then mapped after the analog ones in the process image. If the number of digital I/Os is greater than 16 bits, the head station automatically begins a new word.

4.1 View

The view shows three parts:

- The fieldbus connection, the DIP switch and the rotary encoder switches are located on the left side.
- LEDs for operating status, bus communication, error messages and diagnostics, as well as the service interface are in the middle area.
- The right side shows a power supply unit for the system supply and contacts for the field supply of the series-connected I/O modules via power jumper contacts.
  LEDs show the status of the operating voltage for the system and field power (jumper contacts).

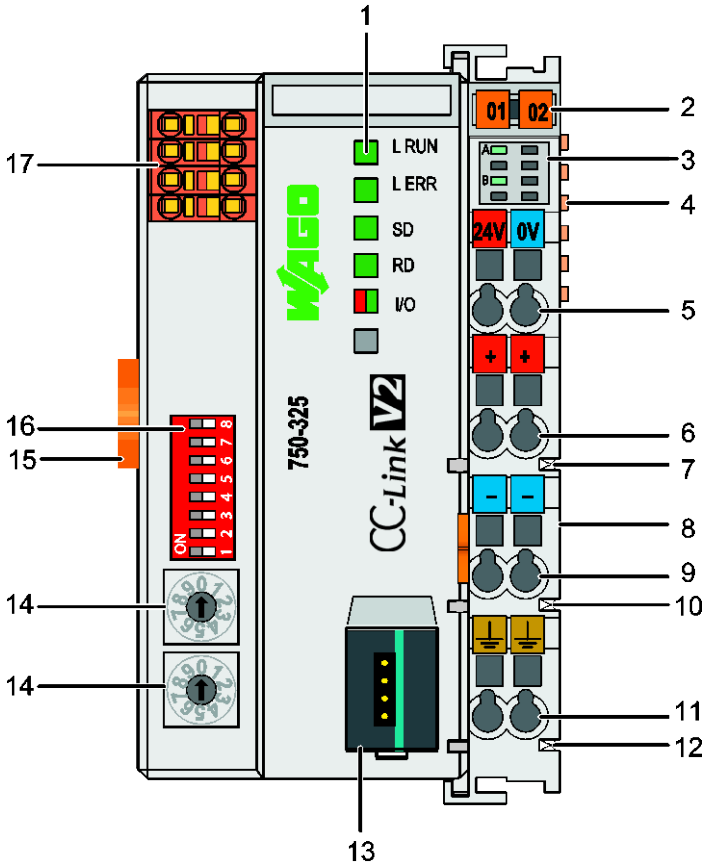

Figure 24: View Fieldbus Coupler CC-*Link* V 2.0

Table 11: Legend for Figure “View Fieldbus Coupler CC-Link V2.0”

Pos.	Desig-nation	Meaning	Details see Section
1	L RUN, L ERR, SD, RD, I/O	Status LEDs Fieldbus	„Device Description“ > „Display Elements“
2	---	Carrier for additional marking possibility on two miniature WSB markers	---
3	A, B or C	Status LED’s system/field supply	“Device Description” > “Display Elements”
4	---	Data contacts	“Connect Devices” > “Data Contacts/Local Bus”
5	24 V, 0 V	CAGE CLAMP® connections system supply	“Connect Devices” > “Connecting a Conductor to the CAGE CLAMP®”
6	+	CAGE CLAMP® connections field supply 24 VDC	“Connect Devices” > “Connecting a Conductor to the CAGE CLAMP®”
7	---	Power jumper contact 24 VDC	“Connect Devices” > “Power Contacts/Field Supply”
8	---	Unlocking lug	“Mounting” > “Inserting and Removing Devices”
9	-	CAGE CLAMP® connections field supply 0 V	“Connect Devices” > “Connecting a Conductor to the CAGE CLAMP®”
10	---	Power jumper contact 0 V	“Connect Devices” > “Power Contacts/Field Supply”
11	(Ground)	CAGE CLAMP® connections field supply (ground)	“Connect Devices” > “Connecting a Conductor to the CAGE CLAMP®”
12	---	Power jumper contact (ground)	“Connect Devices” > “Power Contacts/Field Supply”
13	---	Service interface (open flap)	“Device Description” > “Operating Elements”
14	---	Rotary encoder switch	“Device Description” > “Operating Elements”
15	---	Locking Disc	“Mounting” > “Inserting and Removing Devices”
16	---	DIP Switch	"Device Description" > "Operating Elements"
17	---	Fieldbus connection 4-pole pin strip (spring bar 231 Series *MCS)*	“Device Description“ > “Connectors“

4.2 Connectors

4.2.1 Device Supply

The device is powered via terminal blocks with CAGE CLAMP® connections.

The device supply generates the necessary voltage to power the electronics of the device and the internal electronics of the connected I/O modules.

The fieldbus interface is galvanically separated to the electrical potential of the device.

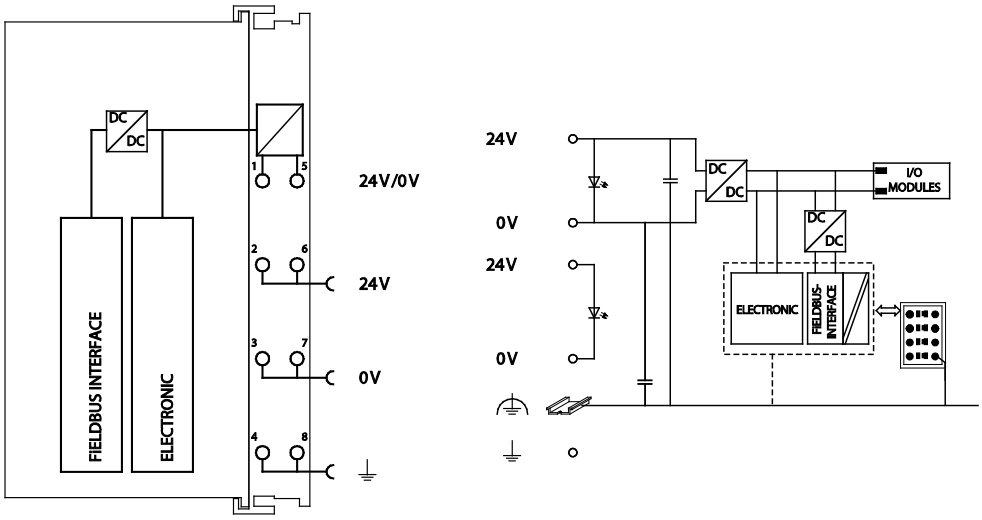

Figure 25: Device Supply

4.2.2 Fieldbus Connection

The socket is arranged physically lower, allowing the coupler to fit in an 80 mm high enclosure after plug connection with the spring bar.

4.2.2.1 Connection Using Multi Connectors

The CC-Link fieldbus connection is made on the 4-pole pin strip via a 2-wire spring bar 231 Series MCS.
The 2-wire spring bar type 231-2304 is included in the delivery.

The fieldbus cable connection is isolated.

A terminating resistor must be set at the beginning and at the end of the CC-Link network. When the CC-Link connection line (FANC-SB) is used, a resistance value of 110 Ohm must be selected. If a high efficency CC-Link connection line (FANC-SBH) is used, a resistance value of 130 Ohm is to be selected.

The fieldbus system is galvanically isolated from the remaining electronics.

The shield is connected directly to the ground via a carrier rail contact. The cable shield must be applied to the Pin 4 “Shield.” In order to prevent the formation of ground loops by the cable shield, this must only be connected to the “Shield” at one end.

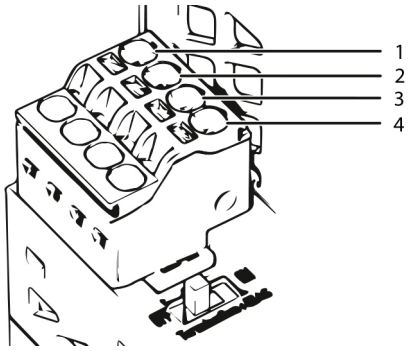

Figure 26: Fieldbus connections, Series 231 (MCS)

The assignment of the 4-pole 2-wire spring bar for the CC-Link interface is made as follows:

Table 12: Signal assignment for the CC-Link Fieldbus Connection

Pin	Signal	Description
1	DG	Data Ground
2	DB	Data B
3	DA	Data A
4	SLD	Shield termination

4.3 Display Elements

The operating condition of the fieldbus coupler or the node is displayed with the help of illuminated indicators in the form of light-emitting diodes (LEDs).
The LED information is routed to the top of the case by light guides. In some cases, the LEDs are multi-colored (red, green or orange).

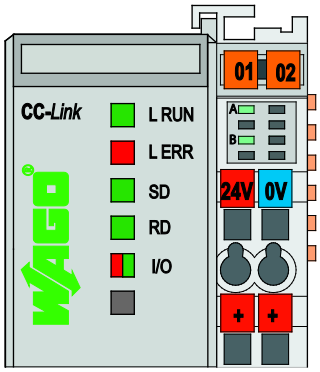

Figure 27: Display Elements

For the diagnostics of the different domains fieldbus, node and supply voltage, the LEDs can be divided into three groups:

Table 13: Display Elements Fieldbus Status

LED	Color	Meaning
L RUN	green	Data link is being executed.
L ERR	red	Communication error (master)
SD	green	Data is being transmitted.
RD	green	Data is being received.

Table 14: Display Elements Node Status

LED	Color	Meaning
I/O	green	Node operation.
	green blinking	Waiting for initial data.
	red blinking	Signals via a blink code faults encountered.

Table 15: Display Elements Supply Voltage

LED	Color	Meaning
A	green	indicates the status of the operating voltage – system
B	green	indicates the status of the operating voltage – power jumper contacts

Information

More information about the LED Signaling
Read the detailed description for the evaluation of the displayed LED state in the section “Diagnostics” > … > “LED Signaling”.

4.4 Operating Elements

4.4.1 Service Interface

The service interface is located behind the flap.

It is used for the communication with the WAGO-I/O-*CHECK* and for downloading the firmware updates.

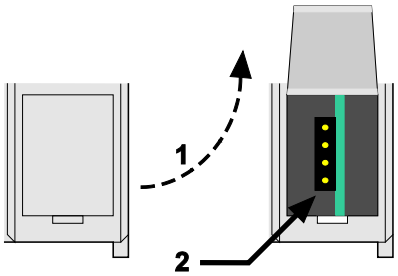

Figure 28: Service Interface (Closed and Opened Flap)

Table 16: Legend for Figure “Service Interface (Closed and Opened Flap)”

Number	Description
1	Open closed
2	View Service Interface

NOTICE

Device must be de-energized!
To prevent damage to the device, unplug and plug in the communication cable only when the device is de-energized!

The connection to the 4-pin header under the cover flap can be realized via the communication cables with the item numbers750-920 and 750-923 or via the WAGO radio adapter with the item number 750-921.

4.4.2 Rotary Encoder Switch Station Address

Two decimal rotary encoder switches on the fieldbus coupler are used to set the station address.

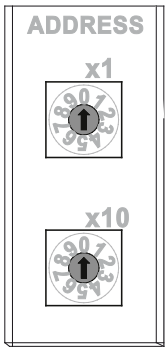

Figure 29: Rotary Encoder Switch Station Address

The “x1” switch determines the unit position of the address.
The “x10” switch determines the tens position of the address.
Valid station addresses for the fieldbus coupler fall between 0 and 64.

The fieldbus coupler takes over the station address set in the initialization phase after switching on.

If the station address is changed during operation by a rotary coding switch, the change only takes effect after restarting the system.

4.4.3 DIP Switch

The DIP switch on the fieldbus coupler is used to parameterize the fieldbus coupler.

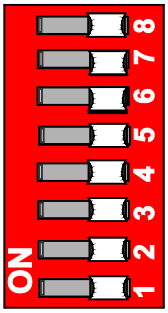

Figure 30: DIP Switch

The 8-pole DIP switch is used to set

- the operation mode
- the extended cyclic setting for multiple cycles
- the number of occupied stations
- the baud rate

Pin	Function
8	Operation mode: CC-Link V2.0*)/V1.1
6/7	Extended cyclic setting with number of cycles: 1/2/4*)/8
4/5	Number of occupied stations: 1/2/3/4*)
1/2/3	Baud rate: 156 kBaud / 625 kBaud / 2.5 MBaud / 5 MBaud / 10 MBaud*)

*) default setting

4.4.3.1 Operation Mode

The pin 8 of the DIP switch determines the operation mode of the fieldbus coupler.

Table 17: Operation Mode Setting

Pin	Value	Setting
8	0	CC-Link V 1.1
	1*)	CC-Link V 2.0

*) default setting

4.4.3.2 Extended Cyclic Setting

The extended cyclic setting is set via pins 6 and 7 of the DIP switch. This setting is only possible with CC-Link V 2.0.

Table 18: Extended Cyclic Setting

Pin	Value	Setting
6/7	0/0	1 cycle
	1/0	2 cycles
	0/1*)	4 cycles
	1/1	8 cycles

*) default setting

4.4.3.3 Occupied Stations

The number of occupied stations is set via pins 4 and 5 of the DIP switch.

Table 19: Occupied Stations Setting

Pin	Value	Setting
4/5	0/0	1 station
	1/0	2 stations
	0/1	3 stations
	1/1*)	4 stations

*) default setting

4.4.3.4 Baud Rate

The baud rate is set via pins 1 til 3 of the DIP switch.

Table 20: Baud Rate Setting

Pin	Value	Setting
1/2/3	0/0/0	156 kBaud
	1/0/0	625 kBaud
	0/1/0	2.5 MBaud
	1/1/0	5 MBaud
	0/0/1*)	10 MBaud
	1/0/1	Invalid setting
	0/1/1	
	1/1/1	

*) default setting

4.5 Technical Data

4.5.1 Device Data

Table 21: Technical Data – Device Data

Width	61.5 mm
Height (from upper-edge of DIN 35)	71.9 mm
Length	100 mm
Weight	approx. 149 g

4.5.2 System Data

Table 22: Technical Data – System Data

Number of fieldbus couplers on one master max.	64
Number of I/O modules per node max.	64
Transmission medium	shielded Cu cable 2 / 3 x 0.5 mm^2
Max. length of fieldbus segment	100 … 1200 m (dependent on baud rate / cable)
Transfer rate	156 kBaud … 10 MBaud
Bus coupler connection	1 x 4-pin plug connector; series 231 *MCS (MULTICONNECTION SYSTEM)*, female connector of type 231-2304 is included
Operation Mode	CC-Link V1.1/V2.0*)
Occupied stations	1 … 4*)
Extended cyclic setting	1; 2; 4*); 8 cycles
Input process image max.	For 1, 2, 3, 4 station addresses: RX (digital inputs): V1.1: 16, 48, 80, 112 bits V2.0: 16, 48, 80, 112 bits (1 cycle) 16, 80, 144, 208 bits (2 cycles) 48, 176, 304, 432 bits (4 cycles) 112, 368, 624, 880 bits (8 cycles) and each 16 bits system area RWr (analog inputs): V1.1: 4, 8, 12, 16 words (16 bits) V2.0: 4, 8, 12, 16 words (1 cycle) 8, 16, 24, 32 words (2 cycles) 16, 32, 48, 64 words (4 cycles) 32, 64, 96, 128 words (8 cycles)

Output process image	For 1, 2, 3, 4 station addresses: RY (digital outputs): V1.1: 16, 48, 80, 112 bits V2.0: 16, 48, 80, 112 bits (1 cycle) 16, 80, 144, 208 bits (2 cycles) 48, 176, 304, 432 bits (4 cycles) 112, 368, 624, 880 bits (8 cycles) and each 16 bits system area RWw (analog outputs): V1.1: 4, 8, 12, 16 words (16 bits) V2.0: 4, 8, 12, 16 words (1 cycle) 8, 16, 24, 32 words (2 cycles) 16, 32, 48, 64 words (4 cycles) 32, 64, 96, 128 words (8 cycles)

*) Factory setting

4.5.3 Supply

Table 23: Technical Data – Supply

Power source	only be powered from a SELV power source (Safety Extra Low Voltage)
Voltage via power jumper contacts	24 V DC (-25 % ... +30 %)
Current via power jumper contacts max.	10 A DC
Input current typ. at rated load (24 V)	600 mA
Efficiency of power supply typ. at nominal load	90 %
Internal current consumption	200 mA at 5 V
Total current for I/O modules	1800 mA at 5 V
Overvoltage category	II
Isolation	500 V system/supply

4.5.4 Accessories

Table 24: Technical Data – Accessories

Miniature WSB Quick marking system

4.5.5 Connection Type

Table 25: Technical Data – Field Wiring

Wire connection	CAGE CLAMP®
Cross section	0.08 mm² … 2.5 mm², AWG 28 … 14
Stripped lengths	8 mm … 9 mm / 0.33 in

Table 26: Technical Data – Power Jumper Contacts

Power jumper contacts	Spring contact, self-cleaning

Table 27: Technical Data – Data Contacts

Data contacts	Slide contact, hard gold plated, self-cleaning

4.5.6 Climatic Environmental Conditions

Table 28: Technical Data – Climatic Environmental Conditions

Surrounding air temperature (operation)	0 °C … 55 °C
Surrounding air temperature (operation) for components with extended temperature range (750-xxx/025-xxx)	−20 °C … +60 °C
Surrounding air temperature (storage)	−25 °C … +85 °C
Surrounding air temperature (storage) for components with extended temperature range (750-xxx/025-xxx)	−40 °C … +85 °C
Operating altitude	0 … 2000 m
Relative humidity	Max. 5 % … 95 % without condensation
Pollution degree	2
Protection type	IP20
Resistance to harmful substances	Acc. to IEC 60068-2-42 and IEC 60068-2-43
Maximum pollutant concentration at relative humidity < 75 %	$SO_2 \leq 25$ ppm $H_2S \leq 10$ ppm
Special conditions	• Ensure that additional measures for components are taken, which are used in an environment involving: – dust, caustic vapors or gases – ionizing radiation • Ensure that the permissible temperature range of the connecting cable is correct dimensioned depending on the installation position and current intensity, because the clamping point temperature at 10 A can be up to 25 °C above the expected surrounding air temperature.

4.5.7 Mechanical Strength

Table 29: Technical Data – Mechanical Strength

Vibration resistance	Acc. to IEC 60068-2-6 Comment to the vibration resistance: a) Type of oscillation: sweep with a rate of change of 1 octave per minute 10 Hz ≤ f < 57 Hz, const. Amplitude 0,075 mm 57 Hz ≤ f < 150 Hz, const. Acceleration 1 g b) Period of oscillation: 10 sweep per axis in each of the 3 vertical axes
Shock resistance	Acc. to IEC 60068-2-27 Comment to the shock resistance: a) Type of impulse: half sinusoidal b) Intensity of impulse: 15 g peak value, 11 ms maintenance time c) Route of impulse: 3 impulses in each pos. And neg. direction of the 3 vertical axes of the test object, this means 18 impulses in all.
Free fall	Acc. IEC 60068-2-32 ≤ 1 m (module in original packing)

4.6 Approvals

Information

More information about approvals.
Detailed references to the approvals are listed in the document “Overview Approvals **WAGO I/O SYSTEM 750**”, which you can find via the internet under: www.wago.com → DOWNLOADS → Documentation → System Description.

The following approvals have been granted to 750-325 fieldbus coupler:

CE Conformity Marking

The following Ex approvals have been granted to 750-325 fieldbus coupler:

TÜV 14 ATEX 148929 X
II 3 G Ex ec IIC T4 Gc
IECEx TUN 14.0035 X
Ex ec IIC T4 Gc

c UL us UL E175199 for use in Ordinary Location

c UL us UL E198726 for Use in Hazardous Locations
Cl I, Div 2, Group A, B, C, D, T4

4.7 Standards and Guidelines

750-325 fieldbus coupler meets the following standards and guidelines:

UL Ordinary Locations	
UL Standard for Safety – for Industrial Control Equipment	UL 61010-2-201
UL Hazardous Locations	
STANDARD FOR SAFETY – Nonincendive Electrical Equipment for Use in Class I and II, Division 2 and Class III, Divisions 1 and 2 Hazardous (Classified) Locations	UL 121201
EMC CE-Immunity to interference	EN 61000-6-2
EMC CE-Emission of interference	EN 61000-6-4

5 Mounting

5.1 Installation Position

Along with horizontal and vertical installation, all other installation positions are allowed.

Note

Use an end stop in the case of vertical mounting!
In the case of vertical assembly, an end stop has to be mounted as an additional safeguard against slipping.

WAGO order no. 249-116	End stop for DIN 35 rail, 6 mm wide
WAGO order no. 249-117	End stop for DIN 35 rail, 10 mm wide

5.2 Overall Configuration

The maximum total length of a fieldbus node without fieldbus coupler/controller is 780 mm including end module. The width of the end module is 12 mm. When assembled, the I/O modules have a maximum length of 768 mm.

Examples:

- 64 I/O modules with a 12 mm width can be connected to a fieldbus coupler/controller.
- 32 I/O modules with a 24 mm width can be connected to a fieldbus coupler/controller.

Exception:

The number of connected I/O modules also depends on the type of fieldbus coupler/controller is used. For example, the maximum number of stackable I/O modules on one PROFIBUS DP/V1 fieldbus coupler/controller is 63 with no passive I/O modules and end module.

NOTICE

Observe maximum total length of a fieldbus node!
The maximum total length of a fieldbus node without fieldbus coupler/controller and without using a 750-628 I/O Module (coupler module for internal data bus extension) may not exceed 780 mm.
Also note the limitations of individual fieldbus couplers/controllers.

Note

Increase the total length using a coupler module for internal data bus extension!

You can increase the total length of a fieldbus node by using a 750-628 I/O Module (coupler module for internal data bus extension). For such a configuration, attach a 750-627 I/O Module (end module for internal data bus extension) after the last I/O module of a module assembly. Use an RJ-45 patch cable to connect the I/O module to the coupler module for internal data bus extension of another module block.

This allows you to segment a fieldbus node into a maximum of 11 blocks with maximum of 10 I/O modules for internal data bus extension.

The maximum cable length between two blocks is five meters.

More information is available in the manuals for the 750-627 and 750-628 I/O Modules.

5.3 Mounting onto Carrier Rail

5.3.1 Carrier Rail Properties

All system components can be snapped directly onto a carrier rail in accordance with the European standard EN 60175 (DIN 35).

NOTICE

Do not use any third-party carrier rails without approval by WAGO!
WAGO Kontakttechnik GmbH & Co. KG supplies standardized carrier rails that are optimal for use with the I/O system. If other carrier rails are used, then a technical inspection and approval of the rail by WAGO Kontakttechnik GmbH & Co. KG should take place.

Carrier rails have different mechanical and electrical properties. For the optimal system setup on a carrier rail, certain guidelines must be observed:

- The material must be non-corrosive.
- Most components have a contact to the carrier rail to ground electro-magnetic disturbances. In order to avoid corrosion, this tin-plated carrier rail contact must not form a galvanic cell with the material of the carrier rail which generates a differential voltage above 0.5 V (saline solution of 0.3 % at 20°C).
- The carrier rail must optimally support the EMC measures integrated into the system and the shielding of the I/O module connections.
- A sufficiently stable carrier rail should be selected and, if necessary, several mounting points (every 20 cm) should be used in order to prevent bending and twisting (torsion).
- The geometry of the carrier rail must not be altered in order to secure the safe hold of the components. In particular, when shortening or mounting the carrier rail, it must not be crushed or bent.
- The base of the I/O components extends into the profile of the carrier rail. For carrier rails with a height of 7.5 mm, mounting points are to be riveted under the node in the carrier rail (slotted head captive screws or blind rivets).
- The metal springs on the bottom of the housing must have low-impedance contact with the DIN rail (wide contact surface is possible).

5.3.2 WAGO DIN Rails

WAGO carrier rails meet the electrical and mechanical requirements shown in the table below.

Table 30: WAGO DIN Rails

Item No.	Description
210-112	35 × 7.5; 1 mm; steel; bluish, tinned, chromed; slotted
210-113	35 × 7.5; 1 mm; steel; bluish, tinned, chromed; unslotted
210-197	35 × 15; 1.5 mm; steel; bluish, tinned, chromed; slotted
210-114	35 × 15; 1.5 mm; steel; bluish, tinned, chromed; unslotted
210-118	35 × 15; 2.3 mm; steel; bluish, tinned, chromed; unslotted
210-198	35 × 15; 2.3 mm; copper; unslotted
210-196	35 × 8.2; 1.6 mm; aluminum; unslotted

5.4 Spacing

The spacing between adjacent components, cable conduits, casing and frame sides must be maintained for the complete fieldbus node.

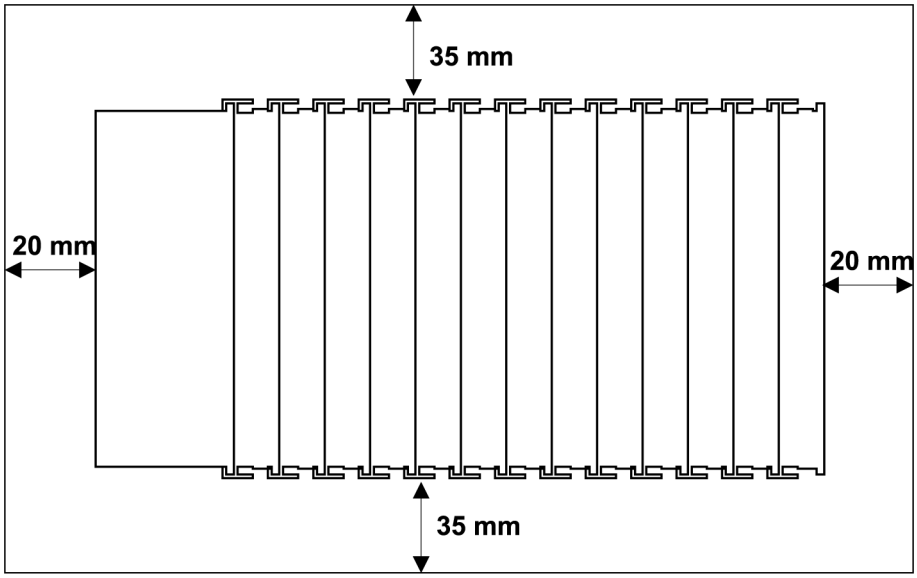

Figure 31: Spacing

The spacing creates room for heat transfer, installation or wiring. The spacing to cable conduits also prevents conducted electromagnetic interferences from influencing the operation.

5.5 Mounting Sequence

Fieldbus couplers, controllers and I/O modules of the WAGO I/O SYSTEM 750 are snapped directly on a carrier rail in accordance with the European standard EN 60175 (DIN 35).

The reliable positioning and connection is made using a tongue and groove system. Due to the automatic locking, the individual devices are securely seated on the rail after installation.

Starting with the fieldbus coupler or controller, the I/O modules are mounted adjacent to each other according to the project design. Errors in the design of the node in terms of the potential groups (connection via the power contacts) are recognized, as the I/O modules with power contacts (blade contacts) cannot be linked to I/O modules with fewer power contacts.

⚠ CAUTION

Risk of injury due to sharp-edged blade contacts!
The blade contacts are sharp-edged. Handle the I/O module carefully to prevent injury. Do not touch the blade contacts.

NOTICE

Insert I/O modules only from the proper direction!
All I/O modules feature grooves for power jumper contacts on the right side. For some I/O modules, the grooves are closed on the top. Therefore, I/O modules featuring a power jumper contact on the left side cannot be snapped from the top. This mechanical coding helps to avoid configuration errors, which may destroy the I/O modules. Therefore, insert I/O modules only from the right and from the top.

Note

Don't forget the bus end module!
Always plug a bus end module (750-600) onto the end of the fieldbus node! You must always use a bus end module at all fieldbus nodes with WAGO I/O SYSTEM 750 fieldbus couplers or controllers to guarantee proper data transfer.

5.6 Inserting and Removing Devices

DANGER

Do not work when devices are energized!
High voltage can cause electric shock or burns.
Switch off all power to the device prior to performing any installation, repair or maintenance work.

5.6.1 Inserting the Fieldbus Coupler/Controller

1. When replacing the fieldbus coupler/controller for an already available fieldbus coupler/controller, position the new fieldbus coupler/controller so that the tongue and groove joints to the subsequent I/O module are engaged.

2. Snap the fieldbus coupler/controller onto the carrier rail.

3. Use a screwdriver blade to turn the locking disc until the nose of the locking disc engages behind the carrier rail (see the following figure). This prevents the fieldbus coupler/controller from canting on the carrier rail.

With the fieldbus coupler/controller snapped in place, the electrical connections for the data contacts and power contacts (if any) to the possible subsequent I/O module are established.

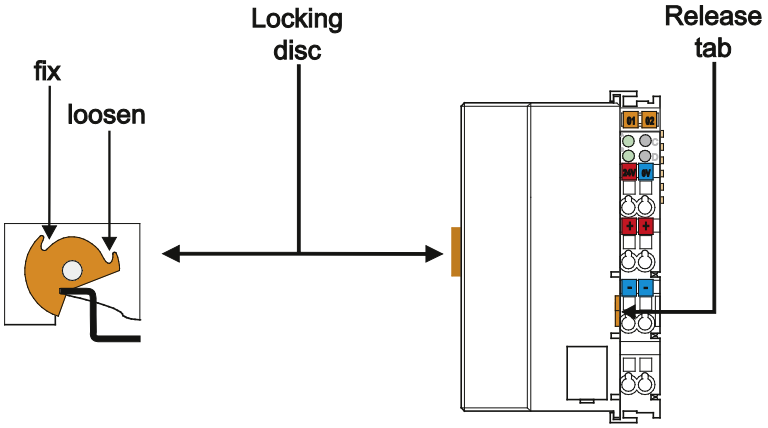

Figure 32: Release Tab of Extended ECO Fieldbus Coupler (Example)

5.6.2 Removing the Fieldbus Coupler/Controller

1. Use a screwdriver blade to turn the locking disc until the nose of the locking disc no longer engages behind the carrier rail.

2. Remove the fieldbus coupler/controller from the assembly by pulling the release tab.

Electrical connections for data or power contacts to adjacent I/O modules are disconnected when removing the fieldbus coupler/controller.

5.6.3 Inserting the I/O Module

1. Position the I/O module in such a way that the groove and spring are connected to the preceding and following components.

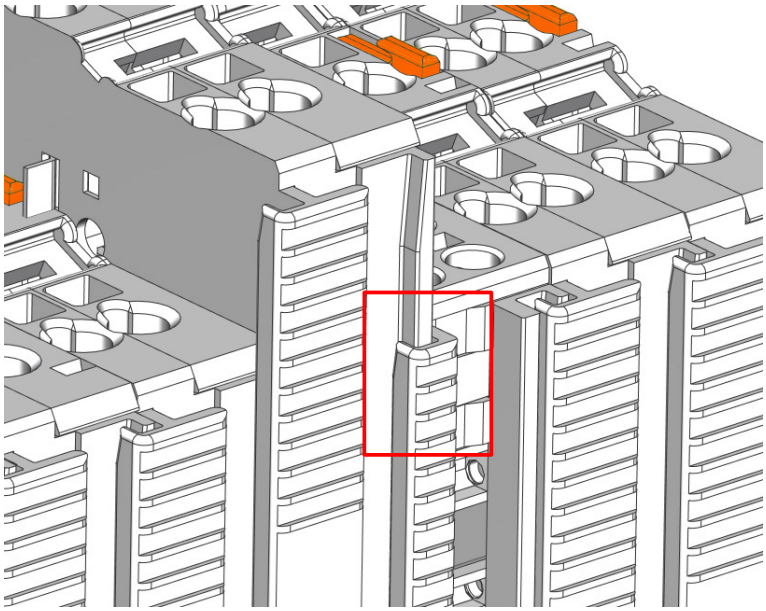

Figure 33: Inserting I/O Module (Example)

2. Press the I/O module into the assembly until the I/O module snaps into the carrier rail.

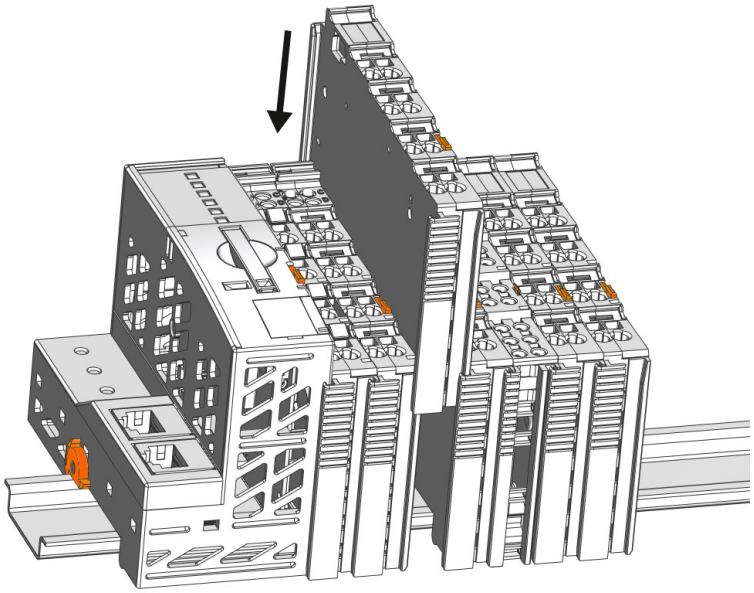

Figure 34: Snap the I/O Module into Place (Example)

3. Check that the I/O module is seated securely on the carrier rail and in the assembly. The I/O module must not be inserted crooked or askew.

Once the I/O module has snapped into place, the electrical connections for the data contacts and power contacts (if any) to the head station or to the preceding and, if applicable, following I/O module are established.

5.6.4 Removing the I/O Module

1. Remove the I/O module from the assembly by pulling the release tab.

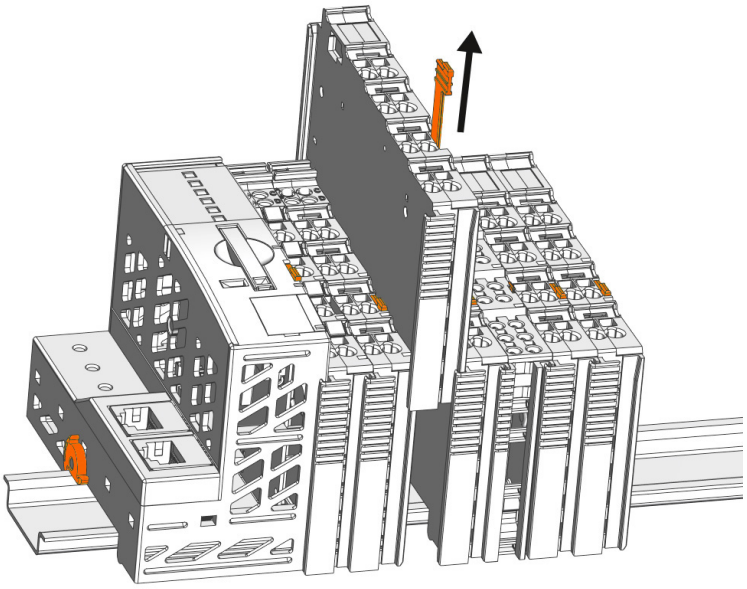

Figure 35: Removing the I/O Module (Example)

Electrical connections for data or power jumper contacts are disconnected when removing the I/O module.

6 Connect Devices

6.1 Data Contacts/Local Bus

Communication between the fieldbus coupler/controller and the I/O modules as well as the system supply of the I/O modules is carried out via the local bus. The contacting for the local bus consists of 6 data contacts, which are available as self-cleaning gold spring contacts.

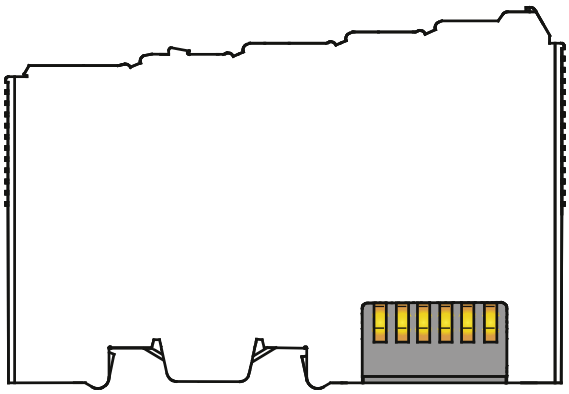

Figure 36: Data Contacts

NOTICE

Do not place the I/O modules on the gold spring contacts!
Do not place the I/O modules on the gold spring contacts in order to avoid soiling or scratching!

NOTICE

Ensure that the environment is well grounded!
The devices are equipped with electronic components that may be destroyed by electrostatic discharge. When handling the devices, ensure that the environment (persons, workplace and packing) is well grounded. Avoid touching conductive components, e.g. data contacts.

6.2 Power Contacts/Field Supply

⚠ CAUTION

Risk of injury due to sharp-edged blade contacts!
The blade contacts are sharp-edged. Handle the I/O module carefully to prevent injury. Do not touch the blade contacts.

Self-cleaning power jumper contacts used to supply the field side are located on the right side of most of the fieldbus couplers/controllers and on some of the I/O modules. These contacts come as touch-proof spring contacts. As fitting counterparts the I/O modules have male contacts on the left side.

Power jumper contacts

Blade	0	0	3	2
Spring	0	3	3	2

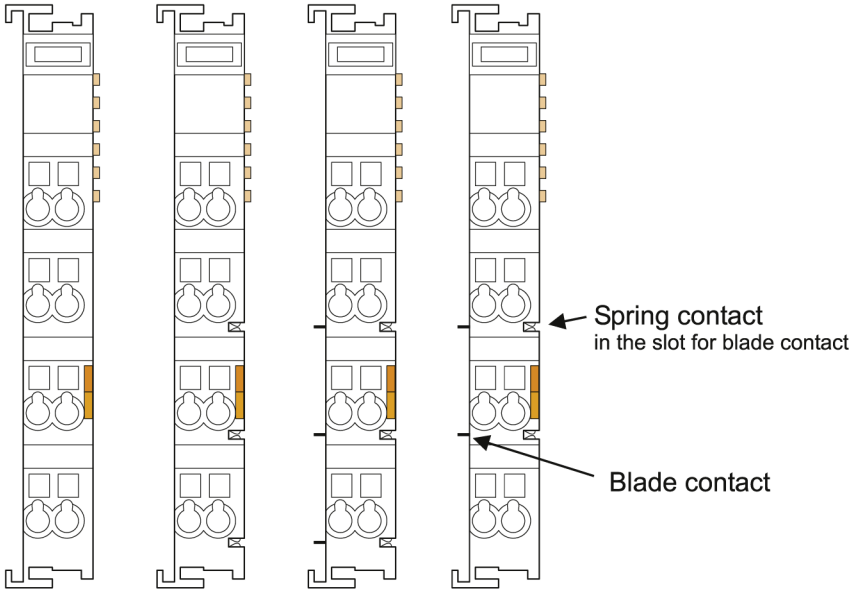

Figure 37: Example for the Arrangement of Power Contacts

Note

Field bus node configuration and test via smartDESIGNER
With the WAGO ProServe® Software smartDESIGNER, you can configure the structure of a fieldbus node. You can test the configuration via the integrated accuracy check.

6.3 Connecting a Conductor to the CAGE CLAMP®

The WAGO CAGE CLAMP® connection is appropriate for solid, stranded and finely stranded conductors.

Note

Only connect one conductor to each CAGE CLAMP®!
Only one conductor may be connected to each CAGE CLAMP®.
Do not connect more than one conductor at one single connection!

If more than one conductor must be routed to one connection, these must be connected in an up-circuit wiring assembly, for example using WAGO feed-through terminals.

1. For opening the CAGE CLAMP® insert the actuating tool into the opening above the connection.
2. Insert the conductor into the corresponding connection opening.
3. For closing the CAGE CLAMP® simply remove the tool. The conductor is now clamped firmly in place.

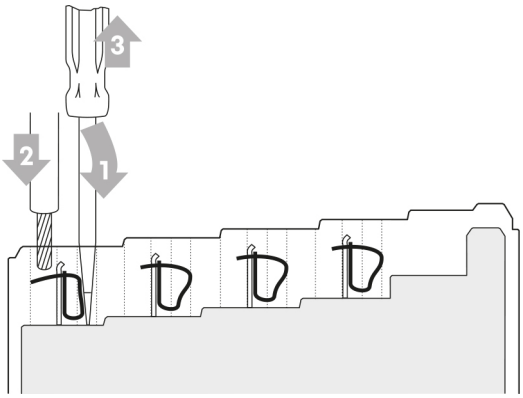

Figure 38: Connecting a Conductor to a CAGE CLAMP®

7 Function Description

7.1 Initialization

After master configuration and electrical installation of the fieldbus station, the system is operative.

The coupler begins running up after switching on the power supply.

Upon initialization, the fieldbus coupler determines the I/O modules and configuration. The 'I/O' LED flashes red.

After a trouble-free start-up, the coupler enters “Fieldbus start” mode and the 'I/O' LED is blinking green and indicates the set number of occupied stations and circuits by means of a blinking code. If an error occurs during start-up, the I / O LED is blinking red and indicates cyclically the corresponding error message by up to 3 blinking sequences for the diagnostics.

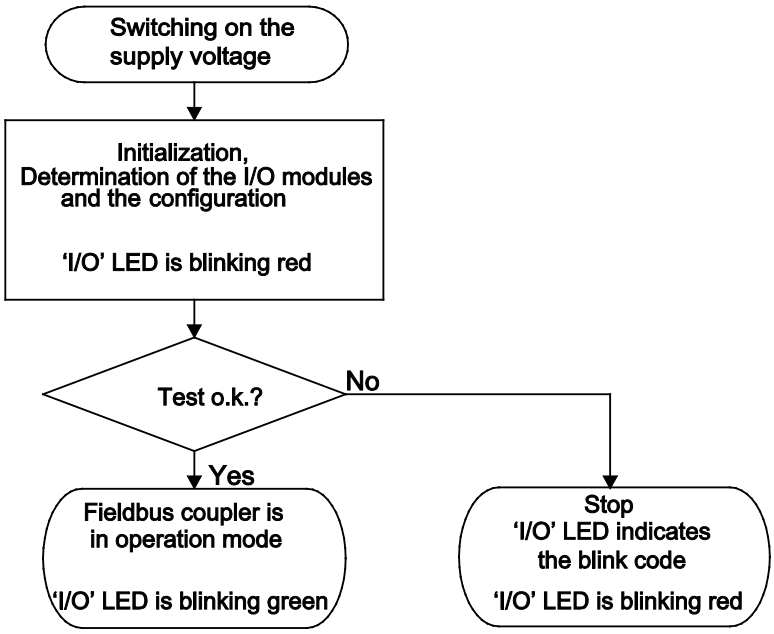

Figure 39: Initialization

Information

More information about the LED Signaling
Read the detailed description for the evaluation of the displayed LED state in the section “Diagnostics” > … > “LED Signaling”.

7.2 Process Data Architecture

The following sections provide a glimpse of the internal functioning, data processing and addressing in CC-Link communication.

7.2.1 Basic Setup

After switching on the fieldbus coupler, it identifies all I/O modules of the node that send or expect to receive data (data/bit width > 0). Any number of analog input/output modules and digital input/output modules can be arranged within a node.

Information

Additional Information
For the fieldbus-specific structure of the process values of any I/O module within the 750 or 753 Series of the WAGO-I/O-SYSTEM, refer to Section “I/O modules” >> “Structure of process data for CC-Link“.

The coupler creates an internal local process image on the basis of the data width, the type of I/O module and the position of the module in the node. This process image is separated into input and output data range.

For both, the local input and output process image, the I/O module data is stored in the corresponding process image depending on the order in which the modules are connected to the coupler.

Note

Hardware changes can result in changes of the process image!
If the hardware configuration is changed by adding, changing, removing or reparametrisation of I/O modules with a data width > 0 bit, this result in a new process image structure. The process data addresses would then change. If adding I/O modules, the process data of all previous I/O modules has to be taken into account.

7.2.2 Address Areas of the CC-Link Fieldbus Coupler

7.2.2.1 Address Area Overview

Depending on the configuration, a CC-Link slave can occupy up to four stations (occupied stations). In addition, in the setting of the CC-Link specification V2.0, the extended cyclic setting can be selected with 1, 2, 4 or 8 cycles for data transmission.

The areas shown in the following table are allocated for the digital data (remote I/O) depending on the number of occupied stations and depending on the selected cycles of the extended cyclic setting assigned from the master station.

In this table "RX" stands for the input bits and "RY" for the output bits, which are specified bit by bit with "points".
"RWw" is the readable register words, and "RWw" is the changeable register words, which are indicated by words with "words".

Table 31: Assigned Areas depending in the CC-Link Configuration Setting

Number of **occupied stations** ↓		CC-Link Version				
		Version 1.1	**Version 2.0**			
		-	**1 Cycle**	**2 Cycles**	**4 Cycles**	**8 Cycles**
1	RX, RY	each 32 points		each 32 points	each 64 points	each 128 points
	RWr, RWw	4 words		each 8 words	each 16 words	each 32 words
2	RX, RY	each 64 points		each 96 points	each 192 points	each 384 points
	RWr, RWw	8 words		each 16 words	each 32 words	each 64 words
3	RX, RY	each 96 points		each 160 points	each 320 points	each 640 points
	RWr, RWw	12 words		each 24 words	each 48 words	each 96 words
4	RX, RY	each 128 points		each 224 points	each 448 points	each 896 points
	RWr, RWw	16 words		each 32 words	each 64 words	each 128 words

Note

16 Points for System!
Note, sixteen points of remote I/O are defined by the system.

7.2.2.2 Remote I/O Area

The remote I/O area for digital data is divided into the user-defined area and system area as shown below.

The following example table shows the data area of the remote I/Os for CC-Link V1.1 and identical for CC-Link V2.0 at the setting of one cycle.

In the table below, "m" denotes the register number assigned to each remote device, and "n" denotes the last register number for the number of occupied points.

The highest register number for CC-Link V1.1 and identical for CC-Link V2.0 at the setting of one cycle is:

n = (2 * No. of occupied stations) - 1.

The highest register number for CC-Link V2.0 at the setting of several cycles is:

n = (2 * No. of occupied stations * No. of cycles) - (No. of cycles + 1).

Table 32: Data Area of the Remote I/Os (Example V1.1 and V2.0 at the Setting of one Cycle)

Link Input			**Link Output**	
User defined Area			**User defined Area**	
RXm0 RXm1 RXm2 RXm3 RXm4 RXm5 RXm6 RXm7 RXm8 RXm9 RXmA RXmB RXmC RXmD RXmE RXmF	Depends on number of occupied stations for CC-Link V1.1 or for CC-Link V2.0 at the setting of one cycle as follows: One station/(one cycle): **16 points**		RYm0 RYm1 RYm2 RYm3 RYm4 RYm5 RYm6 RYm7 RYm8 RYm9 RYmA RYmB RYmC RYmD RYmE RYmF	Depends on number of occupied stations for CC-Link V1.1 or for CC-Link V2.0 at the setting of one cycle as follows: One station/(one cycle): **16 points**
RX(m+1)0 … RX(m+2)F	Two stations /(one cycle): **48 points**		RY(m+1)0 … RY(m+2)F	Two stations /(one cycle): **48 points**
RX(m+3)0 … RX(m+4)F	Three stations /(one cycle): **80 points**		RY(m+3)0 … RY(m+4)F	Three stations /(one cycle): **80 points**
RX(m+5)0 … RX(m+6)F	Four stations/(one cycle): **112 points**		RY(m+5)0 … RY(m+6)F	Four stations/(one cycle): **112 points**
System area			**System area**	
RX(m+n)0	Reserved		RY(m+n)0	Reserved
RX(m+n)1	Reserved		RY(m+n)1	Reserved
RX(m+n)2	Reserved		RY(m+n)2	Reserved
RX(m+n)3	Reserved		RY(m+n)3	Reserved
RX(m+n)4	Reserved		RY(m+n)4	Reserved
RX(m+n)5	Reserved		RY(m+n)5	Reserved
RX(m+n)6	Reserved		RY(m+n)6	Reserved
RX(m+n)7	Reserved		RY(m+n)7	Reserved
RX(m+n)8	Initial data processing request flag		RY(m+n)8	Initial data processing complete flag
RX(m+n)9	Initial data setting complete flag		RY(m+n)9	Initial data setting request flag
RX(m+n)A	Error status flag		RY(m+n)A	Error reset request flag
RX(m+n)B	Remote station ready flag		RY(m+n)B	Reserved
RX(m+n)C	Reserved		RY(m+n)C	Reserved
RX(m+n)D	Reserved		RY(m+n)D	Reserved
RX(m+n)E	Reserved		RY(m+n)E	Reserved
RX(m+n)F	Reserved		RY(m+n)F	Reserved

The following table describes the system area flags.

Table 33: System Area Flags

System Area-Flags		Description
RX(m+n)8	Initial data processing request flag	Used when the fieldbus coupler requests the initial processing to the master after the power supply of the fieldbus coupler is switched on or after a hardware reset.
RY(m+n)8	Initial data processing complete flag	
RX(m+n)9	Initial data setting complete flag	Used when the master requests the initial setup to the fieldbus coupler.
RY(m+n)9	Initial data setting request flag	
RX(m+n)A	Error status flag	Used when the fieldbus coupler notifies an error other than watchdog timer errors.
RY(m+n)A	Error reset request flag	
RX(m+n)B	Remote station ready flag	Used to notify the completion of the initial processing for the initial data setup.

The position of the system area and the size of the usable data area depend on the selected CC-Link configuration. In analogy to the above data range representation of the remote I/Os, these can be derived from the following position tables, respectively, according to the number of extended cycle settings and occupied stations.

Table 34: Position of Remote I/O System Area V1.1 or V2.0 at the Setting of one Cycle

RX/RY	Number of occupied Stations at the Setting of one Cycle			
	1	2	3	4
00 – 0F	User Area	User Area	User Area	User Area
10 – 1F	System Area	User Area	User Area	User Area
20 – 2F	(cannot be used)	User Area	User Area	User Area
30 – 3F		System Area	User Area	User Area
40 – 4F		(cannot be used)	User Area	User Area
50 – 5F			System Area	User Area
60 – 6F			(cannot be used)	User Area
70 – 7F				System Area

Table 35: Position of Remote I/O System Area V2.0 at the Setting of two Cycles

RX/RY	Number of occupied Stations at the Setting of two Cycles			
	1	2	3	4
00 – 0F	User Area	User Area	User Area	User Area
10 – 1F	System Area	User Area	User Area	User Area
20 – 2F	(cannot be used)	User Area	User Area	User Area
30 – 3F		User Area	User Area	User Area
40 – 4F		User Area	User Area	User Area
50 – 5F		System Area	User Area	User Area
60 – 6F		(cannot be used)	User Area	User Area
70 – 7F			User Area	User Area
80 – 8F			User Area	User Area
90 – 9F			System Area	User Area
A0 – AF			(cannot be used)	User Area
B0 – BF				User Area
C0 – CF				User Area
D0 – DF				System Area

Table 36: Position of Remote I/O System Area V2.0 at the Setting of four Cycles

RX/RY	Number of occupied Stations at the Setting of four Cycles			
	1	2	3	4
00 – 0F	User Area	User Area	User Area	User Area
…	…	…	…	…
20 – 2F	User Area	User Area	User Area	User Area
30 – 3F	System Area	User Area	User Area	User Area
40 – 4F	(cannot be used)	User Area	User Area	User Area
…		…	…	…
A0 – AF		User Area	User Area	User Area
B0 – BF		System Area	User Area	User Area
C0 – CF		(cannot be used)	User Area	User Area
…			…	…
120 – 12F			User Area	User Area
130 – 13F			System Area	User Area
140 – 14F			(cannot be used)	User Area
…				…
1A0 – 1AF				User Area
1B0 – 1BF				System Area

Table 37: Position of Remote I/O System Area V2.0 at the Setting of eight Cycles

RX/RY	Number of occupied Stations at the Setting of eight Cycles			
	1	2	3	4
00 – 0F	User Area	User Area	User Area	User Area
…	…	…	…	…
60 – 6F	User Area	User Area	User Area	User Area
70 – 7F	System Area	User Area	User Area	User Area
80 – 8F	(cannot be used)	User Area	User Area	User Area
…		…	…	…
160 – 16F		User Area	User Area	User Area
170 – 17F		System Area	User Area	User Area
180 – 18F		(cannot be used)	User Area	User Area
…			…	…
260 – 26F			User Area	User Area
270 – 27F			System Area	User Area
280 – 28F			(cannot be used)	User Area
…				…
360 – 36F				User Area
370 – 37F				System Area

7.2.2.3 Remote Register Area

The data area of the remote registers for the analog data consists entirely of a user-defined area.

In the table below, "m" denotes the register number assigned to each remote device, and "n" denotes the last register number for the number of occupied registers.

The highest register number is:

n = (No. of occupied stations * No. of cycles * 4 words) - 1.

Table 38: Data Area of the Remote Registers

Link Register			**Link Register**	
User defined Area			**User defined Area**	
RWrm0 RWrm1 RWrm2 RWrm3	One station/ one cycle: **4 words**		RWwm0 RWwm1 RWwm2 RWwm3	One station/ one cycle **4 words**
RWrm4 RWrm5 RWrm6 RWrm7	One station/ two cycles or two stations/ one cycle: **8 words**		RWwm4 RWwm5 RWwm6 RWwm7	One station/ two cycles or two stations/ one cycle: **8 words**
RWrm8 RWrm9 RWrm10 RWrm11	Three stations/one cycle: **12 words**		RWwm8 RWwm9 RWwm10 RWwm11	Three stations/one cycle: **12 words**
RWrm12 RWrm13 RWrm14 RWrm15	One station/four cycles or two stations /two cycles or four stations/one cycle: **16 words**		RWwm12 RWwm13 RWwm14 RWwm15	One station/four cycles or two stations /two cycles or four stations/one cycle: **16 words**
RWrm16 RWrm17 RWrm18 RWrm19	Three stations/two cycles: **24 words**		RWwm16 RWwm17 RWwm18 RWwm19	Three stations/two cycles: **24 words**
RWrm20 RWrm21 RWrm22 RWrm23			RWwm20 RWwm21 RWwm22 RWwm23	
RWrm24 RWrm25 RWrm26 RWrm27	One station/eight cycles or two stations /four cycles or four stations/two cycle: **32 words**		RWwm24 RWwm25 RWwm26 RWwm27	One station/eight cycles or two stations /four cycles or four stations/two cycle: **32 words**
RWrm28 RWrm29 RWrm30 RWrm31			RWwm28 RWwm29 RWwm30 RWwm31	
RWrm32 RWrm33 RWrm34 RWrm35	Three stations/four cycles: **36 words**		RWwm32 RWwm33 RWwm34 RWwm35	Three stations/four cycles: **36 words**

RWrm36 RWrm37 RWrm38 RWrm39	Two stations/eight cycles or four stations/four cycles: **48 words**		RWwm36 RWwm37 RWwm38 RWwm39	Two stations/eight cycles or four stations/four cycles: **48 words**
RWrm40 RWrm41 RWrm42 RWrm43			RWwm40 RWwm41 RWwm42 RWwm43	
RWrm44 RWrm45 RWrm46 RWrm47			RWwm44 RWwm45 RWwm46 RWwm47	
RWrm48 … RWrm95	Three stations/eight cycles: **96 words**		RWwm48 … RWwm95	Three stations/eight cycles **96 words**
RWrm96 … RWrm127	Four stations/eight cycles: **128 words**		RWwm96 … RWwm127	Four stations/eight cycles: **128 words**

Note

Hardware changes can result in changes of the process image!
If the hardware configuration is changed by adding, changing, removing or reparametrisation of I/O modules with a data width > 0 bit, this result in a new process image structure. The process data addresses would then change. If adding I/O modules, the process data of all previous I/O modules has to be taken into account.

7.3 Data Exchange

The CC-Link Fieldbus Coupler is essentially equipped with two interfaces for data exchange:

- the interface to the fieldbus (Master)
- the interface to the I/O modules.

Data exchange takes place between the fieldbus master and the I/O modules.

Exchange of process data takes place with CC-Link Fieldbus Coupler using the CC-Link protocol.

After mapping the I/O data from the I/O modules to the local process image, the fieldbus coupler cyclically transfers the digital input data from the process image to the Remote I/O area and the analog input data to the Remote Register area. In the same way, the digital output data from the Remote I/O area and the analog output data from the Remote Register area are transferred to the process image.

7.3.1 Memory Space

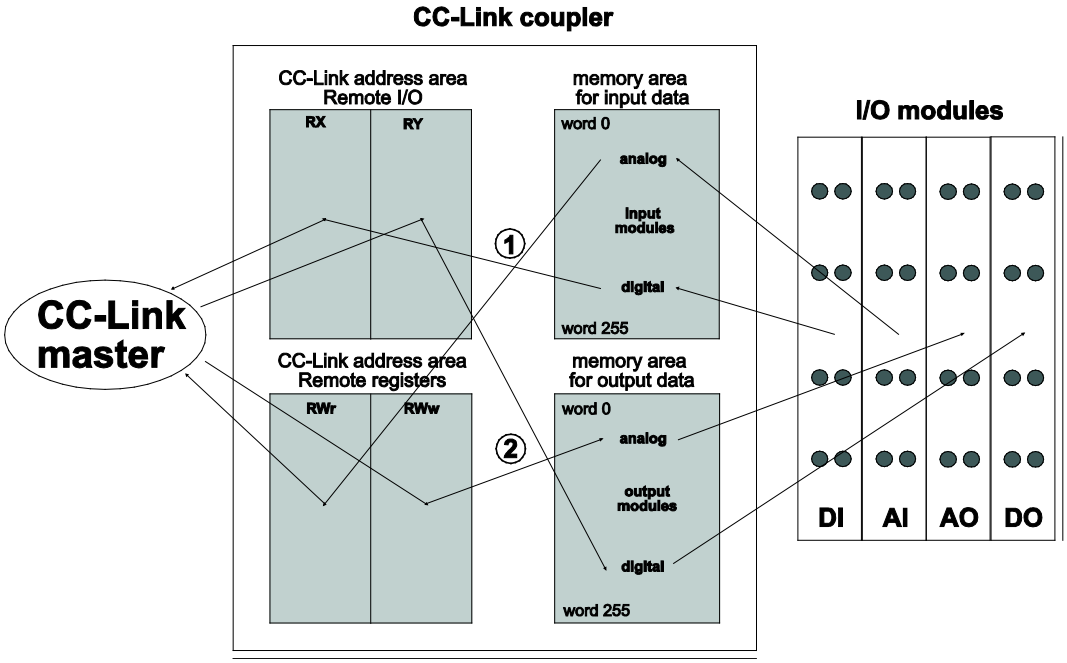

Figure 40: 750-325750-325Memory Areas and Data Exchange for a Fieldbus Coupler

The fieldbus coupler process image contains the physical data for the I/O modules. These have a value of 0 ... 255.

1. From the fieldbus side, the input module data can be read via the CC-Link address areas RX and RWr.

2. It is also possible to write data to the output modules from the fieldbus side via the CC-Link address areas RY and RWw.

7.3.2 Assigning the I/O Module Data to the CC-Link Address Range

Data is exchanged between the CC-Link master and I/O modules via the CC-Link address range shown above in the section “Process Data Structure”.

Specific data is accessed via the respective CC-Link register address in the “Word” format.

However, because the I/O module data is byte-aligned by channel, it is possible that data from an I/O module consists of different data types (e.g., 1-byte value and 2-byte value) and in a word not corresponding its data type, overwriting the CC-Ling register limits. It is also possible for there to be mixed data from different I/O module channels in one register.

Note

Observe process data quantity!
For the setup and number of input and output bits or bytes of the individual I/O modules, please refer to the corresponding descriptions of the I/O modules. This and the type assignment of I/O modules are available in the section “I/O Modules” >> “Process Data Configuration for CC-Link”.

The “k” index in the following tables point to the next available Link input/output (RX/RY) or to the next available Link register (RWr/RWw).

7.3.2.1 Example Type 1 – Digital Input

Example for data exchange of the process data of a 2-channel digital input module 750-400.

Table 39: Example Data Transfer Type 1

Link Input	Signal name		Link Output	Signal name
RXn(k)	DI Channel 1			
RXn(k+1)	DI Channel 1			

7.3.2.2 Example Type 6 – 2-channel digital input; Acknowledgement; Diagnostics

Example for data exchange of the process data of a 2-channel digital input module with diagnostics and acknowledge 750-418.

Table 40: Example Data Transfer Type 6

Link Input	Signal name		Link Output	Signal name
RXn(k)	DI Channel 1, Input Bit		RYn(k)	DI Channel 1, Ackn Bit
RXn(k+1)	DI Channel 2, Input Bit		RYn(k+1)	DI Channel 2, Ackn Bit
RXn(k+2)	DI Channel 1, Diag Bit			
RXn(k+3)	DI Channel 2, Diag Bit			

7.3.2.3 Example Type 10 – Digital output

Example for data exchange of the process data of a 4-channel digital output module 750-504.

Table 41: Example Data Transfer Type Typ 10

Link Input	Signal name		Link Output	Signal name
			RYn(k)	DO Channel 1, Output Bit
			RYn(k+1)	DO Channel 2, Output Bit
			RYn(k+2)	DO Channel 3, Output Bit
			RYn(k+3)	DO Channel 4, Output Bit

7.3.2.4 Example Type 11 – Digital output; Diagnostics type 1

Example for data exchange of the process data of a 2-channel digital output module with 2 diagnosis-bits per channel 750-506.

Table 42: Example Data Transfer Type 11

Link Input	Signal name		Link Output	Signal name
RXn(k)	DO Channel 1, Diag Bit0		RYn(k)	DO Channel 1, Output Bit
RXn(k+1)	DO Channel 1, Diag Bit1		RYn(k+1)	DO Channel 2, Output Bit
RXn(k+2)	DO Channel 2, Diag Bit0			
RXn(k+3)	DO Channel 2, Diag Bit1			

7.3.2.5 Example Type 8 – Analog input 16bit

Example for data exchange of the process data of a 2-channel analog input module 750-452.

Table 43: Example Data Transfer Type 8

Link Input	Signal name	high byte	low byte		Link Output	Signal name	high byte	low byte
RWrn(k)	AI Channel 1	D1	D0					
RWrn(k+1)	AI Channel 2	D3	D2					

7.3.2.6 Example Type 14 – Analog output

Example for data exchange of the process data of a 2-channel analog output module 750-550.

Table 44: Example Data Transfer Type 14

Link Input	Signal name	high byte	low byte		Link Output	Signal name	high byte	low byte
					RWwn(k)	AO Channel 1	D1	D0
					RWwn(k+1)	AO Channel 2	D3	D2

7.3.2.6.1 Example Type 2 – Up Counter

Example for data exchange of the process data of a counter module 750-404.

Table 45: Example Data Transfer Type 2

Link Input	Signal name	high byte	low byte		Link Output	Signal name	high byte	low byte
RWrn(k)	Status byte	0	S		RWwn(k)	Control byte	0	C
RWrn(k+1)	Counter value Data bytes D0/1	D1	D0		RWwn(k+1)	Counter set value Data bytes D0/1	D1	D0
RWrn(k+2)	Counter Value Data bytes D2/3	D3	D2		RWwn(k+2)	Counter set value Data bytes D2/3	D3	D2

7.3.2.6.2 Example Type 13 – Pulse width outputs

Example for data exchange of the process data of a pulse width output module 750-511.

Table 46: Example Data Transfer Type 13

Link Input	Signal name	high byte	low byte		Link Output	Signal name	high byte	low byte
RWrn(k)	Channel 1 Status byte S0/ Channel 1 Data byte D0	D0	S0		RWwn(k)	Channel 1 Control byte C0/ Channel 1 Data byte D0	D0	C0
RWrn(k+1)	Channel 1 Data byte D1/ Channel 2 Status byte S1	S1	D1		RWwn(k+1)	Channel 1 Data byte D1/ Channel 2 Control byte C1	C1	D1
RWrn(k+2)	Channel 2 Data bytes D2/3	D3	D2		RWwn(k+2)	Channel 2 Data bytes D2/3	D3	D2

7.3.2.6.3 Example

In this example the remote station consists of:

- 1 x 750-325 CC-Link fieldbus coupler,
- 2 x 750-400 2-channel digital input module (DI) / Type 1,
- 4 x 750-504 4-channel digital output module (DO) / Type 10,
- 2 x 750-467 2-channel analog input module (AI) / Type 8,
- 1 x 750-550 2-channel analog output module (AO) / Type 14,
- 1 x 750-506 2-channel digital output module (DO/DIAG) / Type 11
- 1 x 750-418 2-channel digital input module (DO/DIAG/Ack)/Type 6
- 1 x 750-404 Counter module /Type 2
- 1 x 750-600 End module

The CC-Link fieldbus coupler is parameterized by means of DIP switches as follows:

Table 47: Example – DIP Switch Setting

Pin	value	Setting	
8	1*)	Operation mode	CC-Link V 2.0*)
6/7	0/0	Extended cyclic setting	1
4/5	1/0	Occupied stations	2
1/2/3	0/0/1*)	Baud rate	10 MBaud*)

*) default setting

Input Process Image

Table 48: Input Process Image (Example)

Input Process Image								
Bit	**.7**	**.6**	**.5**	**.4**	**.3**	**.2**	**.1**	**.0**
Byte 0	Analog input module 1, channel 1, Low byte							
Byte 1	Analog input module 1, channel 1, High byte							
Byte 2	Analog input module 1, channel 2, Low byte							
Byte 3	Analog input module 1, channel 2, High byte							
Byte 4	Analog input module 2, channel 1, Low byte							
Byte 5	Analog input module 2, channel 1, High byte							
Byte 6	Analog input module 2, channel 2, Low byte							
Byte 7	Analog input module 2, channel I 2, High byte							
Byte 6	Counter status byte							
Byte 7	Counter value, D0 Low byte							
Byte 8	Counter value, D1 High byte							
Byte 9	Counter value, D2 Low byte							
Byte 10	Counter value, D3 High byte							
Byte 11	DO5C2 Diag1	DO5C2 Diag0	DO5C1 Diag1	DO5C1 Diag0	DI2C2	DI2C1	DI1C2	DI1C1
Byte 12					DI3C2 Diag	DI3C1 Diag	DI3C2	DI3C1
DI: Digital input module DO: Digital output module C : Channel								

Output Process Image

Table 49: Output Process Image (Example)

Output Process Image								
Bit	**.7**	**.6**	**.5**	**.4**	**.3**	**.2**	**.1**	**.0**
Byte 0	Analog output module 1, channel 1, Low byte							
Byte 1	Analog output module 1, channel 1, High byte							
Byte 2	Analog output module 1, channel 2, Low byte							
Byte 3	Analog output module 1, channel 2, High byte							
Byte 4	Counter control byte, Low byte							
Byte 5	Counter set value, D0 Low byte							
Byte 6	Counter set value, D1 High byte							
Byte 7	Counter set value, D2 Low byte							
Byte 8	Counter set value, D3 High byte							
Byte 9	DO2C4	DO2C3	DO2C2	DO2C1	DO1C4	DO1C3	DO1C2	DO1C1
Byte 10	DO4C4	DO4C3	DO4C2	DO4C1	DO3C4	DO3C3	DO3C2	DO3C1
Byte 11					DI3C2 Ackn	DI3C1 Ackn	DO5C2	DO5C1
DI: Digital input module DO: Digital output module C : Channel								

By means of the parameter assignment the fieldbus node occupies two stations on the CC-Link bus. With one cycle of the extended cyclic setting, the address areas shown below are then obtained.

The "n" stands for the data offset in the CC-Link master control.

Address Area Overview

Table 50: Example – Data Area of the Remote I/Os

Link Input	Signal name		Link Output	Signal name
User defined Area			**User defined Area**	
RXn0	DI 1, channel 1		RYn0	DO 1, channel 1
RXn1	DI 1, channel 2		RYn1	DO 1, channel 2
RXn2	DI 2, channel 1		RYn2	DO 1, channel 3
RXn3	DI 2, channel 2		RYn3	DO 1, channel 4
RXn4	DO 5, channel 1 Diag. 0		RYn4	DO 2, channel 1
RXn5	DO 5, channel 1 Diag. 1		RYn5	DO 2, channel 2
RXn6	DO 5, channel 2 Diag. 0		RYn6	DO 2, channel 3
RXn7	DO 5, channel 2 Diag. 1		RYn7	DO 2, channel 4
RXn8	DI 3, channel 1		RYn8	DO 3, channel 1
RXn9	DI 3, channel 2		RYn9	DO 3, channel 2
RXnA	DI 3, channel 1 Diag.		RYnA	DO 3, channel 3
RXnB	DI 3, channel 2 Diag.		RYnB	DO 3, channel 4
RXnC	Not used		RYnC	DO 4, channel 1
RXnD	Not used		RYnD	DO 4, channel 2
RXnE	Not used		RYnE	DO 4, channel 3
RXnF	Not used		RYnF	DO 4, channel 4
RX(n+1)0	Not used		RY(n+1)0	DO 5, channel 1
…	…		RY(n+1)1	DO 5, channel 2
RX(n+2)F	Not used		RY(n+1)2	DI 3, channel 1, Ackn.
			RY(n+1)3	DI 3, channel 2, Ackn.
			RY(n+1)4	Not used
			…	…
			RY(n+2)F	Not used
	Two stations/one cycle: **48 points**			Two stations/one cycle: **48 points**
System Area			**System Area**	
RX(n+1)0	Reserved		RY(n+1)0	Reserved
RX(n+1)1	Reserved		RY(n+1)1	Reserved
RX(n+1)2	Reserved		RY(n+1)2	Reserved
RX(n+1)3	Reserved		RY(n+1)3	Reserved
RX(n+1)4	Reserved		RY(n+1)4	Reserved
RX(n+1)5	Reserved		RY(n+1)5	Reserved
RX(n+1)6	Reserved		RY(n+1)6	Reserved
RX(n+1)7	Reserved		RY(n+1)7	Reserved
RX(n+1)8	Initial data processing request flag		RY(n+1)8	Initial data processing complete flag
RX(n+1)9	Initial data setting complete flag		RY(n+1)9	Initial data setting request flag
RX(n+1)A	Error state flag		RY(n+1)A	Error reset request flag
RX(n+1)B	Remote station ready flag		RY(n+1)B	Reserved
RX(n+1)C	Reserved		RY(n+1)C	Reserved
RX(n+1)D	Reserved		RY(n+1)D	Reserved
RX(n+1)E	Reserved		RY(n+1)E	Reserved
RX(n+1)F	Reserved		RY(n+1)F	Reserved

Table 51: Example – Data Area of the Remote Registers

Link Register	Signal name		Link Register	Signal name
User defined Area			**User defined Area**	
RWrn0 RWrn1 RWrn2 RWrn3	AI 1, channel 1 AI 1, channel 2 AI 2, channel 1 AI 2, channel 2		RWwn0 RWwn1 RWwn2 RWwn3	AO 1, channel 1 AO 1, channel 2 Counter control byte/empty byte Counter set value D0/D1
RWrn4 RWrn5 RWrn6 RWrn7	Counter status byte /empty byte Counter value D0/D1 Counter value D2/D3 Not used Two stations/one cycle: **8 words**		RWwn4 RWwn5 RWwn6 RWwn7	Counter set value D2/D3 Not used Not used Not used Two stations/one cycle: **8 words**

8 Commissioning

This section shows a step-by-step procedure for starting up exemplarily a WAGO fieldbus node.

Note

Exemplary Example!
This description is exemplary and is limited here to the execution of a start-up of one individual fieldbus node with Your control system.

For start-up, different steps are necessary.

- **Connecting Fieldbus Node**
- **Setting and Starting Fieldbus Coupler**
- **Testing the Function of the Fieldbus Node**

In order to be able to communicate in a CC-Link network, further preparations are necessary.

- **Import „CSP+“-File in Configuration Software**
- **Implement minimal CC-Link Master Application**

The description of these work steps can be found in the corresponding following sections.

Following the commissioning descriptions after which the fieldbus node is ready for communication, the following topic is described:

- **Restoring factory settings**

8.1 Connecting Fieldbus Node

1. Install the assembled fieldbus node on the DIN rail. Observe the installation instructions (see “Mounting” section).

2. Connect the 24v power supply to the supply module
(see “System Description” >> “Power Supply” and the section “Connect Devices”).

3. Connect your controller with the CC-Link interface of the fieldbus coupler
(see section “Device Description” >> “Connectors” >> “Fieldbus Connection”).

8.2 Setting and Switching On Fieldbus Couplers

1. Use the rotary encoder switches to set the required station address
(see section “Device Description” >> “Operating Elements” >> “Rotary Encoder Switch Station Address”).

2. Use DIP switches 1/2/3 to set the required baud rate
(see “Device Descriptions” >> “Operating Elements” >> “DIP Switch”).

3. Based on the I/O modules in the fieldbus nodes used, determine the size of the process images for the input and output data
(see section “Function Description” >> “Process Data Architecture” and “Data Exchange” as well as the section “I/O Modules”).

4. Use DIP switches 4/5 to set the number of occupied station addresses according to the determined process image sizes and use DIP switches 6/7 for extended cyclic setting
(see section “Device Description” >> “Operating Elements” >> “DIP Switch”).

5. Turn the operating voltage on.

8.3 Testing the Function of the Fieldbus Node

The fieldbus coupler is initialized. The coupler determines the I/O module configuration and creates a process image.
During start-up, the I/O LED (red) flashes.
If the I/O LED lights up green after a brief period, the fieldbus coupler is operational.

As soon as the 'I/O' LED flashes green, the fieldbus coupler displays the set number of occupied stations and the cyclic setting by means of two successive blinking sequences.

If an error occurs during start-up indicated by the I/O LED flashing red, evaluate the error code and argument and resolve the error.

Information

More information about LED signaling
The exact description for evaluating the LED signal displayed is available in the section "Diagnostics" > … > "LED Signaling".

8.4 Reading in the "CSP+" File in Configuration Software

A "CSP+" file is available to make integrating fieldbus couplers in CC-Link configuration software easier.

This "CSP+" file describes the properties of the fieldbus coupler required for a configuration, e.g., the memory images.

The "CSP+" file is read into the configuration software to configure the CC-Link master for data exchange with the fieldbus coupler.

Structure, content and coding of this system profile data are standardized so the software of various manufacturers can be used for the configuration.

Information

More information about the "CSP+" file
The "CSP+" file is available at www.wago.com.
When installing this file, please refer to the respective documentation for the configuration software you are using.

8.5 Implementing a Basic Application on CC-Link Master

To establish communication between the 750-325 fieldbus coupler and CC-Link master, it is necessary to implement an initial basic application of a user program on the CC-Link master.

This basic application contains the initial data transfer handshake, as well as the error handshake between the fieldbus coupler and master. System area flags are used.

The step-by-step program sequence is illustrated and listed based on the timing diagrams.

8.5.1 Initial Data Transfer Handshake

The initial data transfer handshake is run in the user program as follows:

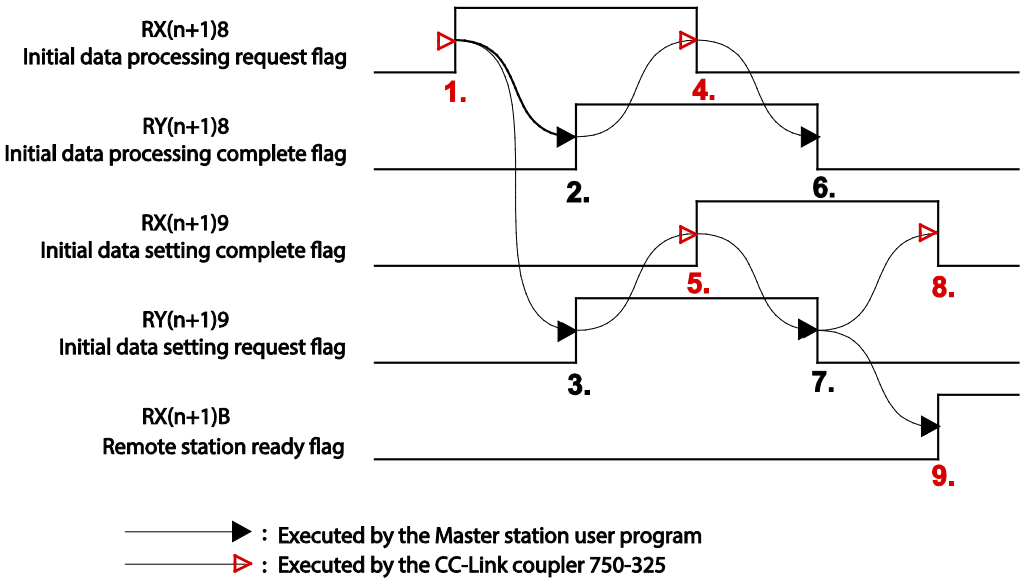

Figure 41: Timing Diagram for the Initial Data Transfer Handshake

1. If the power supply to the 750-325 fieldbus coupler is on, it first sets the RX(m+n)8 flag (Initial data processing request) to ‘1’ to request the initialization process from the master.

2. The user program on the master returns a response via the RY(m+n)8 flag (Initial data processing complete) by setting it to ‘1’.

3. At the same time, the user program also sets the RY(m+n)9 flag (Initial data setting request) on the master to ‘1’ to request data setting of the fieldbus coupler for the initialization process.

4. The fieldbus coupler sets the X(m+n)8 request flag (Initial data processing request) back to ‘0’.

5. It responds to the master's request in parallel by setting the RX(m+n)9 flag (Initial data setting complete) to ‘1’.

6. The user program on the master then sets the RY(m+n)8 flag (Initial data processing complete) back to ‘0’.

7. It then also sets the RY(m+n)9 flag (Initial data setting request) back to ‘0’.

8. The fieldbus coupler also sets the RX(m+n)9 (Initial data setting complete) back to ‘0’.

9. By setting the RX(m+n)B flag (Remote station ready) to ‘1’, the fieldbus then indicates that communication has been established.

8.5.2 Error Handshake

The error handshake is run in the user program as follows:

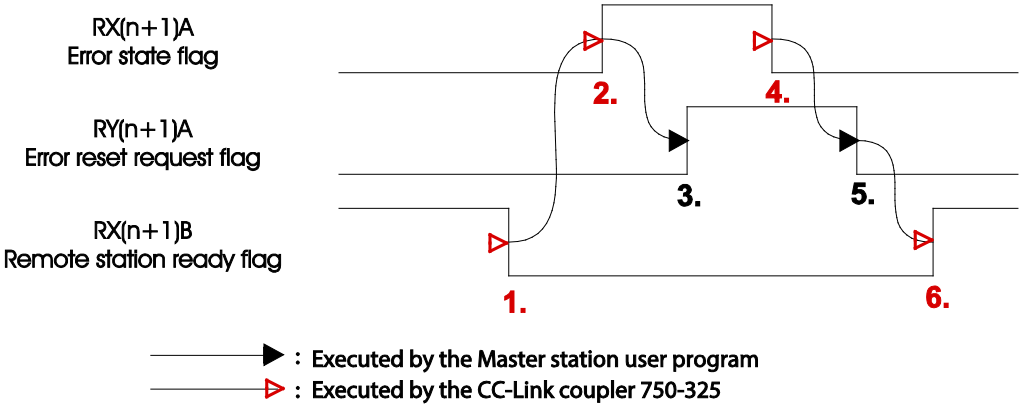

Figure 42: Timing Diagram for the Error Handshake

1. If an error occurs on the fieldbus coupler, it first sets the RX(m+n)B flag (Remote station ready) back to ‘0’.

2. It then sets the RX(m+n)A flag (Error state) to ‘1’ to indicate the error.

3. The user program on the master sets the RY(m+n)A flag (Error reset request) to ‘1’ to request an error correction.

4. Once the error has been resolved, the fieldbus sets the RX(m+n)A flag (Error state) back to ‘0’.

5. The user program on the master also sets the RY(m+n)A request flag (Error reset request) back to ‘0’.

6. By setting the RX(m+n)B flag (Remote station ready) to ‘1’, the fieldbus then indicates that communication has been restored.

8.6 Restoring Factory Settings

To restore the factory settings, proceed as follows:

1. Switch off the supply voltage of the fieldbus controller.

2. Reset the DIP switch of the fieldbus coupler to the factory settings as follows:

Pin	Value	Function
8	1	CC-Link V2.0
6/7	0/1	4 cycles
4/5	1/1	4 occupied stations
1/2/3	0/0/1	10 MBaud

3. Switch on the supply voltage of the fieldbus controller.

A restart of the fieldbus node is implemented automatically.
The start takes place with the default settings.

9 Diagnostics

9.1 LED Signaling

For on-site diagnostics, the fieldbus coupler has several LEDs that indicate the operational status of the fieldbus coupler or the entire node (see following figure).

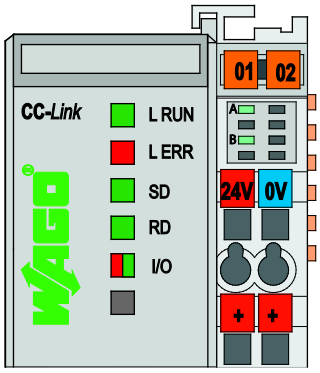

Figure 43: Display Elements

The diagnostics displays and their significance are explained in detail in the following section.

The LEDs are assigned in groups to the various diagnostics areas:

Table 52: LED Assignment for Diagnostics

Diagnostics area	LEDs
Fieldbus status	• L RUN • L ERR • SD • RD
Node status	• I/O
Status Supply Voltage	• A (system supply) • B (field supply)

9.1.1 Evaluating Fieldbus Status

The CC-Link status is displayed by the top LED group (‘L RUN’, ‘L ERR’, ‘SD’ and ‘RD’).

Table 53: Fieldbus Diagnostics

LED Status				Operation
L RUN	L ERR	SD	RD	
ON	BLINK	BLINK	ON	Communicating normally, but CRC errors have been detected due to noise.
ON	BLINK	OFF	ON	Unable to respond because the received data caused a CRC error.
ON	OFF	BLINK	ON	Normal communication.
ON	OFF	OFF	ON	No data for the master.
OFF	BLINK	BLINK	ON	The fieldbus coupler receives a signal from the master, but a CRC error is detected.
OFF	BLINK	OFF	ON	Data for the master caused a CRC error.
OFF	OFF	BLINK	ON	Link with master is not established. The configuration of the fieldbus coupler regarding to the station address and / or number of occupied stations does not match the configuration in the master.
OFF	OFF	OFF	ON	Either no data for the master or unable to receive the data for the master due to noise.
OFF	OFF	OFF	OFF	No communication between master and fieldbus coupler possible, either no master available or master not available, e.g. due to wire breakage.
OFF	ON	OFF	OFF	Invalid switch position for rotary encoder switches or DIP switches.

9.1.2 Evaluating Node Status – I/O LED (Blink Code Table)

The communication status between fieldbus coupler and the I/O modules is indicated by the I/O LED.

Table 54: Node Status Diagnostics – Solution in Event of Error

LED Status	Meaning	Solution
I/O		
green	The fieldbus node is operating correctly.	Normal operation.
green cyclical flashing	The set number of occupied stations and extended cyclic setting are shown with two consecutive flashing sequences. There are short intervals between the sequences.	Evaluate the flashing sequences shown. The flashing indicates the configuration setting consisting of the indicator signal for the number of occupied stations and the subsequent indicator signal for the extended cyclic setting (not applicable for V1.1).
orange flashing	Start of the firmware. 1 … 2 seconds of rapid flashing indicates start-up.	-
red	Fieldbus coupler hardware defect	Replace the fieldbus coupler.
red flashing	Flashing with approx. 10 Hz indicates the initialization of the local bus or a local bus error.	Note the following flashing sequence.
red cyclical flashing	Up to three successive flashing sequences indicate local bus errors. There are short intervals between the sequences.	Evaluate the flashing sequences based on the following blink code table. The blinking indicates an error message comprised of an error code and error argument.
off	No data cycle on the local bus.	The fieldbus coupler supply is off.

Device boot-up occurs after turning on the power supply. The I/O LED flashes orange.

Then the local bus is initialized. This is indicated by flashing red at 10 Hz for 1 … 2 seconds.

After a trouble-free initialization, the I/O LED is blinking green, depending on the settings for the configuration.

In the event of an error, the I/O LED continues to blink red. Blink codes indicate detailed error messages. An error is indicated cyclically by up to 3 flashing sequences.

After elimination of the error, restart the node by turning the power supply of the device off and on again.

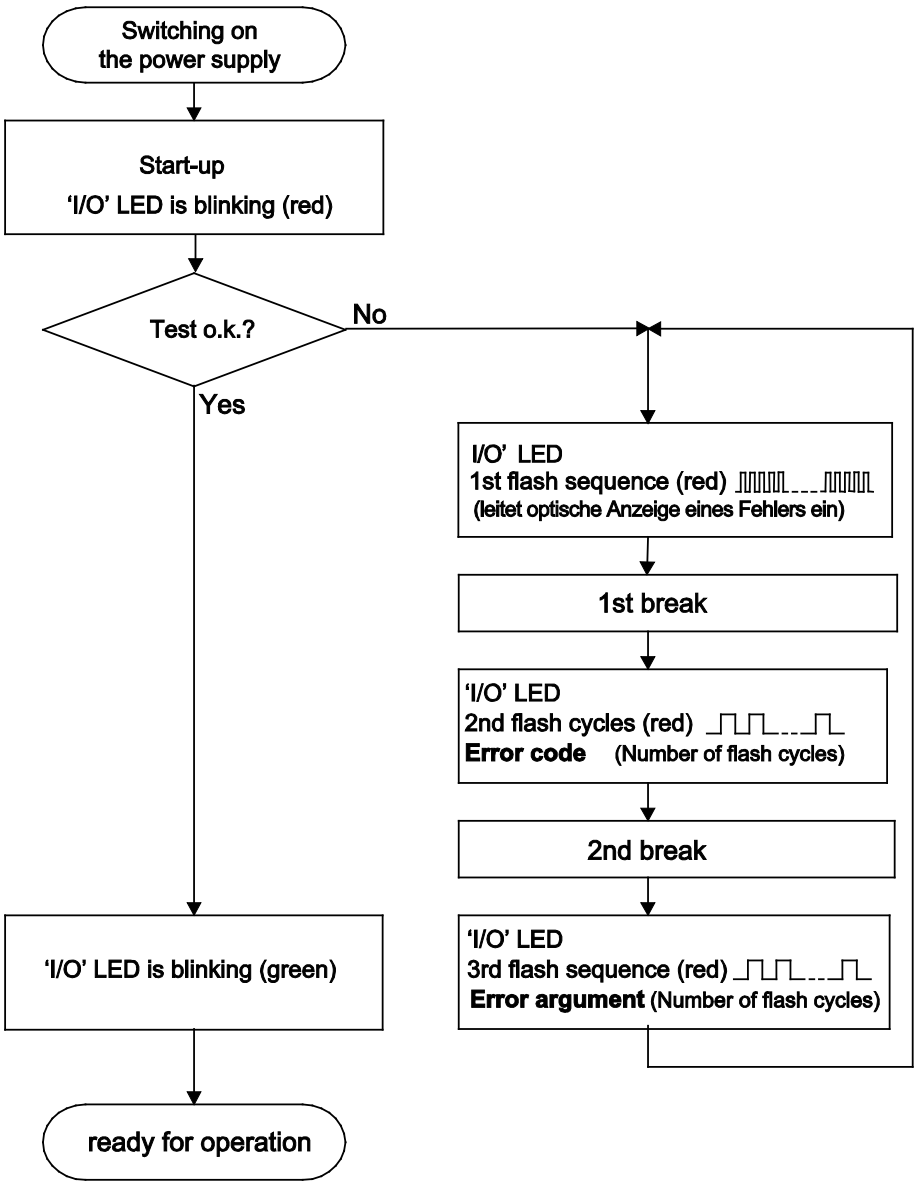

Figure 44: Node Status – I/O LED Signaling

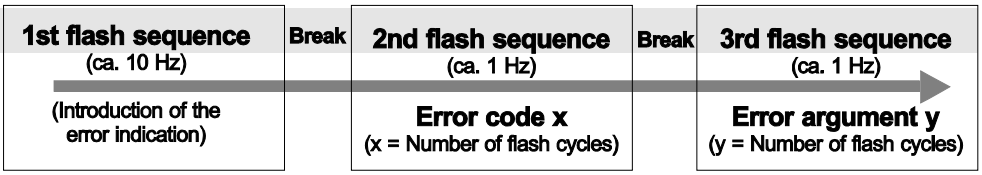

Figure 45: Error Message Coding

Example of a module error:

- The I/O LED starts the error display with the first flashing sequence (approx. 10 Hz).
- After the first break, the second flashing sequence starts (approx. 1 Hz): The I/O LED blinks four times.
  Error code 4 indicates “data error internal data bus”.

- After the second break, the third flashing sequence starts (approx. 1 Hz): The I/O LED blinks twelve times.
  Error argument 12 means that the local bus is interrupted behind the twelfth I/O module.

The thirteenth I/O module is either defective or has been pulled out of the assembly.

Table 55: Blink Code Table for the I/O LED Signaling, Error Code 1

Error code 1: “Hardware and configuration error”		
Error Argument	**Error Description**	**Solution**
-	Invalid check sum in the parameter area of the fieldbus coupler.	1. Turn off the power supply for the node. 2. Replace the fieldbus coupler. 3. Turn the power supply on again.
1	Overflow of the internal buffer memory for the attached I/O modules.	1. Turn off the power for the node. 2. Reduce the number of I/O modules. 3. Turn the power supply on again. 4. If the error persists, replace the fieldbus controller.
2	I/O module(s) with unknown data type	1. Determine the faulty I/O module by first turning off the power supply. 2. Plug the end module into the middle of the node. 3. Turn the power supply on again. 4. - LED continues to flash? - Turn off the power supply and plug the end module into the middle of the first half of the node (toward the fieldbus controller). - LED not flashing? - Turn off the power and plug the end module into the middle of the second half of the node (away from the fieldbus controller). 5. Turn the power supply on again. 6. Repeat the procedure described in step 4 while halving the step size until the faulty I/O module is detected. 7. Replace the faulty I/O module. 8. Inquire about a firmware update for the fieldbus controller.
3	Unknown module type of the Flash program memory	1. Turn off the power supply for the node. 2. Replace the fieldbus controller. 3. Turn the power supply on again.
4	Fault when writing in the Flash program memory.	1. Turn off the power supply for the node. 2. Replace the fieldbus controller. 3. Turn the power supply on again.
5	Fault when deleting the Flash memory.	1. Turn off the power supply for the node. 2. Replace the fieldbus controller. 3. Turn the power supply on again.
6	The I/O module configuration after AUTORESET differs from the configuration determined the last time the fieldbus controller was powered up.	1. Restart the fieldbus controller by turning the power supply off and on.
7	Fault when writing in the serial EEPROM.	1. Turn off the power supply for the node. 2. Replace the fieldbus controller. 3. Turn the power supply on again.

Table 55: Blink Code Table for the I/O LED Signaling, Error Code 1

Error code 1: “Hardware and configuration error”		
Error Argument	**Error Description**	**Solution**
8	Invalid hardware-firmware combination.	1. Turn off the power supply for the node. 2. Replace the fieldbus controller. 3. Turn the power supply on again.
9	Invalid check sum in the serial EEPROM.	1. Turn off the power supply for the node. 2. Replace the fieldbus controller. 3. Turn the power supply on again.
10	Serial EEPROM initialization error	1. Turn off the power supply for the node. 2. Replace the fieldbus controller. 3. Turn the power supply on again.
11	Fault when reading in the serial EEPROM.	1. Turn off the power supply for the node. 2. Replace the fieldbus controller. 3. Turn the power supply on again.
12	Timeout during access on the serial EEPROM	1. Turn off the power supply for the node. 2. Replace the fieldbus controller. 3. Turn the power supply on again.
14	Maximum number of gateway or mailbox modules exceeded	1. Turn off the power for the node. 2. Reduce the number of corresponding modules to a valid number. 3. Turn the power supply on again.

Table 56: Blink Code Table for the I/O LED Signaling, Error Code 2

Error Code 2: “Exceeded Process Image”		
Error Argument	**Error Description**	**Solution**
1	Not used	-
2	Process image is too large.	1. Turn off the power supply of the node. 2. Reduce number of I/O modules. 3. Turn the power supply on.

Table 57: Blink Code Table for the I/O LED Signaling, Error Code 3

Error Code 3: “Protocol error, internal bus”		
Error Argument	**Error Description**	**Solution**
-	Local bus communication is faulty, defective module cannot be identified.	- Are passive power supply modules (750-613) located in the node? - 1. Check that these modules are supplied correctly with power. 2. Determine this by the state of the associated status LEDs. - Are all modules connected correctly or are there any 750-613 Modules in the node? - 1. Determine the faulty I/O module by turning off the power supply. 2. Plug the end module into the middle of the node. 3. Turn the power supply on again. 4. - LED continues to flash? - Turn off the power supply and plug the end module into the middle of the first half of the node (toward the fieldbus coupler). - LED not flashing? - Turn off the power and plug the end module into the middle of the second half of the node (away from the fieldbus coupler). 5. Turn the power supply on again. 6. Repeat the procedure described in step 4 while halving the step size until the faulty I/O module is detected. 7. Replace the faulty I/O module. 8. If there is only one I/O module on the fieldbus coupler and the LED is flashing, either the I/O module or fieldbus coupler is defective. 9. Replace the defective component.

Table 58: Blink Code Table for the I/O LED Signaling, Error Code 4

Error Code 4: “Physical error, internal bus”		
Error Argument	**Error Description**	**Solution**
-	Local bus data transmission error or interruption of the local bus at the fieldbus coupler	1. Turn off the power supply to the node. 2. Plug in an end module behind the fieldbus coupler. 3. Turn the power supply on. 4. Observe the error argument signaled. - Is no error argument indicated by the I/O LED? - 5. Replace the fieldbus coupler. - Is an error argument indicated by the I/O LED? - 6. Identify the faulty I/O module by turning off the power supply. 7. Plug the end module into the middle of the node. 8. Turn the power supply on again. 9. - LED continues to flash? - Turn off the power and plug the end module into the middle of the first half of the node (toward the fieldbus coupler). - LED not flashing? - Turn off the power and plug the end module into the middle of the second half of the node (away from the fieldbus coupler). 10. Turn the power supply on again. 11. Repeat the procedure described in step 6 while halving the step size until the faulty I/O module is detected. 12. Replace the faulty I/O module. 13. If there is only one I/O module on the fieldbus coupler and the LED is flashing, either the I/O module or fieldbus coupler is defective. 14. Replace the defective component.
n*	Interruption of the local bus behind the nth bus module with process data, the maximum supported number is reached, the following modules are no longer supported.	1. Turn off the power supply of the node. 2. Reduce number of I/O modules. 3. Turn the power supply on.

* The number of light pulses (n) indicates the position of the I/O module.
I/O modules without data are not counted (e.g., supply modules without diagnostics)

Table 59: Blink Code Table for the I/O LED Signaling, Error Code 5

Error Code 5: “Initialization error, internal bus”		
Error Argument	**Error Description**	**Solution**
n*	Error in register communication during local bus initialization	1. Turn off the power supply to the node. 2. Replace the (n+1) I/O module containing process data. 3. Turn the power supply on.

* The number of light pulses (n) indicates the position of the I/O module.
I/O modules without data are not counted (e.g., supply modules without diagnostics)

Table 60: Blink Code Table for I/O LED Signaling, Error Code 6

Error code 6: "Node configuration error"		
Error Argument	**Error Description**	**Solution**
1	Too many analog output signals for the remote register area (RWw).	1. Turn off the power supply for the node. 2. Reduce the number of I/O modules with analog output data or increase the number of stations or cycles using DIP switches 4/5 or 6/7. 3. Turn the power supply on again. 4. Does the error persist? Repeat steps 1 through 3.
2	Too many analog input signals for the remote register area (RWr).	1. Turn off the power supply for the node. 2. Reduce the number of I/O modules with analog input data or increase the number of stations or cycles using DIP switches 4/5 or 6/7. 3. Turn the power supply on again. 4. Does the error persist? Repeat steps 1 through 3.
3	Too many digital output signals for the remote I/O area (RY).	1. Turn off the power supply for the node. 2. Reduce the number of I/O modules with digital output data or increase the number of stations or cycles using DIP switches 4/5 or 6/7. 3. Turn the power supply on again. 4. Does the error persist? Repeat steps 1 through 3.
4	Too many digital input signals for the remote I/O area (RX).	1. Turn off the power supply for the node. 2. Reduce the number of I/O modules with digital input data or increase the number of stations or cycles using DIP switches 4/5 or 6/7. 3. Turn the power supply on again. 4. Does the error persist? Repeat steps 1 through 3.
5	Protocol version conflict	1. Turn off the power supply for the node. 2. Change the operating mode using DIP switch 8. 3. Turn the power supply on again.

Table 61: Blink Code Table for the I/O LED Signaling, Error Code 7

Error code 7: “Not supported I/O module”		
Error Argument	**Error Description**	**Solution**
n	First unsupported I/O module in place of n.	1. Turn off the power supply to the node. 2. Replace the nth I/O module containing process data or reduce the number of modules to the number of n-1. 3. Turn the power supply on.

Table 62: Blink Code Table for the 'I/O' LED Signaling, Error Code 8

Error code 8: -not used-		
Error Argument	**Error Description**	**Solution**
-	Not used	

Table 63: Blink Code Table for the I/O LED Signaling, Error Code 9

Error code 9: “CPU Trap error”		
Error Argument	**Error Description**	**Solution**
1	Illegal Opcode	Fault in the program sequence. 1. Please contact the I/O Support.
2	Stack overflow	
3	Stack underflow	
4	NMI	

Table 64: Blink Code Table for I/O LED Signaling, Error Code 10

Error code 10: -not used-		
Error argument	**Error description**	**Remedy**
-	not used	-

9.1.3 Evaluating Power Supply Status

The power supply unit of the device has two green LEDs that indicate the status of the power supplies.
LED 'A' indicates the 24 V supply of the coupler.
LED 'B' reports the power available on the power jumper contacts for field side power.

Table 65: Power supply status diagnostics – solution in event of error

LED Status	Meaning	Solution
A		
Green	Operating voltage for the system is available.	-
Off	No power is available for the system	Check the power supply for the system (24 V and 0 V).
B		
Green	The operating voltage for power jumper contacts is available.	-
Off	No operating voltage is available for the power jumper contacts.	Check the power supply for the power jumper contacts (24 V and 0 V).

10 I/O Modules

10.1 Overview

For modular applications with the WAGO I/O SYSTEM 750, different types of I/O modules are available

- Digital Input Modules
- Digital Output Modules
- Analog Input Modules
- Analog Output Modules
- Communication Modules, Supply and Segment Modules
- Function and Technology Modules

For detailed information on the I/O modules and the module variations, refer to the manuals for the I/O modules.

You will find these manuals on the WAGO web pages under www.wago.com.

Information

More Information about the WAGO I/O SYSTEM
Current information on the modular WAGO I/O SYSTEM is available in the Internet under: www.wago.com.

10.2 Process Data Configuration for CC-Link

For some I/O modules (and their variants), the architecture of the process data depends on the fieldbus.

The process image is word-oriented and byte-aligned for CC-Link.

When word-oriented, data from an I/O module always begins on a word boundary.

If the data from an I/O module is composed of various data types, the byte alignment may prevent data from being in a word that corresponds to its data type. In this case, empty bytes can also be used to display data corresponding to its data type in a word

In the following "**Type 1**" to "**Type 64**" sections, the information regarding byte and bit positions in the process images of the I/O modules is to be observed.

NOTICE

Equipment damage due to incorrect address!
To prevent any damage to the device in the field, you must always take the process data for all previous byte or bit-oriented I/O modules into account when addressing an I/O module at any position in the fieldbus node.

Note

Process image is first structured with analog then digital data!
With any fieldbus node configuration, please note that the data of all analog input and output modules of the series are mapped in the input and output process image. The data of the digital input and output modules is then attached after the analog input and output data, always byte by byte, in the respective process image.

10.2.1 Explanation of the Process Data Representations

The following sections describe the representation for WAGO-I/O SYSTEM 750 and 753 Series I/O modules in the process image of the MODBUS RTU fieldbus coupler/controller, as well as the configuration of the process values.

The first section "**Mapping Types by Item Number**" contains an overview of all available 750 Series I/O modules with fixed connector listed by item number. Item numbers followed by a hashtag "#" and number denote an I/O module parameterization to a specific operating mode or file size.

If there is also a version with 753 Series pluggable connector from an I/O module, it is indicated in the “753” column.
Each I/O module is assigned to a process data type in the “Type” column and the corresponding “Type Designation”.

The width of the process data is then specified by channel as “I” input data and “Q” output data in “bits”, where the leading value in brackets in the table columns specifies how many channels the respective I/O module has and how many times the I/O module occupies the specified data width in the respective process image, e.g., (4 x) 24 = 4 channels, each with 24-bit data width = 96-bit data width total.

The following sections “**Type 1**” and “**Type 64**” list all process data types in detail again, what data widths occupy them in the input and output process image in “bits”, where the leading value in brackets in the rows again specifies how many channels the respective I/O module has and how many times the I/O module occupies the specified data width in the respective process image, e.g., (4 x) 24 = 4 channels, each with 24-bit data width = 96-bit data width total.

A list of item numbers follows that belong to these types and the concrete mapping of the “I” input data and “Q” output data is then represented in table form.
If there are multiple symmetrical channels, only the 1st channel is given each time. The data for all other channels is similarly structured. For the byte and bit position in the “Byte” and “Bit” columns, an offset must then be taken into account.

In addition, the data type and its specific content are listed.

10.2.2 Mapping Types by Item Number

Item Number	753	Type	Type Name	Data Width in Bits	
				I	Q
0750-0400	yes	1	Digital input	(2x) 1	-
0750-0400/0025-0000	-	1	Digital input	(2x) 1	-
0750-0401	yes	1	Digital input	(2x) 1	-
0750-0402	yes	1	Digital input	(4x) 1	-
0750-0402/0025-0000	-	1	Digital input	(4x) 1	-
0750-0403	yes	1	Digital input	(4x) 1	-
0750-0404	yes	2	Up Counter	(1x) 48	(1x) 48
0750-0404/0000-0001	-	2	Up Counter	(1x) 48	(1x) 48
0750-0404/0000-0002	-	3	Peak Time Counter type 1	(1x) 48	(1x) 48
0750-0404/0000-0003	yes	4	Frequency Counter type 1	(1x) 48	(1x) 48
0750-0404/0000-0004	-	24	Up/Down Counter; Switching Output	(1x) 48	(1x) 48
0750-0404/0000-0005	yes	5	2 up counter; 16 bits	(1x) 48	(1x) 48
0750-0405	yes	1	Digital input	(2x) 1	-
0750-0406	yes	1	Digital input	(2x) 1	-
0750-0407/0040-0000	-	1	Digital input	(2x) 1	-
0750-0408	yes	1	Digital input	(4x) 1	-
0750-0409	yes	1	Digital input	(4x) 1	-
0750-0410	yes	1	Digital input	(2x) 1	-
0750-0411	yes	1	Digital input	(2x) 1	-
0750-0412	yes	1	Digital input	(2x) 1	-
0750-0412/0000-0001	yes	1	Digital input	(2x) 1	-
0750-0414	-	1	Digital input	(4x) 1	-
0750-0415	yes	1	Digital input	(4x) 1	-
0750-0416	-	1	Digital input	(2x) 1	-
0750-0418	yes	6	2-channel digital input; Acknowledgement; Diagnostics	(1x) 4	(1x) 4
0750-0419	yes	7	2-channel digital input; Diagnostics	(1x) 4	-
0750-0421	yes	7	2-channel digital input; Diagnostics	(1x) 4	-
0750-0422	yes	1	Digital input	(4x) 1	-
0750-0423	yes	1	Digital input	(4x) 1	-
0750-0424	yes	25	Digital input; Diagnostics	(2x) 2	-
0750-0425	yes	7	2-channel digital input; Diagnostics	(1x) 4	-
0750-0427	yes	1	Digital input	(2x) 1	-
0750-0427/0040-0000	-	1	Digital input	(2x) 1	-
0750-0428	yes	1	Digital input	(4x) 1	-
0750-0429/0040-0001	-	1	Digital input	(2x) 1	-
0750-0430	yes	1	Digital input	(8x) 1	-
0750-0430/0025-0000	-	1	Digital input	(8x) 1	-
0750-0431	yes	1	Digital input	(8x) 1	-
0750-0432	yes	1	Digital input	(4x) 1	-
0750-0433	yes	1	Digital input	(4x) 1	-
0750-0435	-	25	Digital input; Diagnostics	(1x) 2	-
0750-0436	yes	1	Digital input	(8x) 1	-
0750-0437	yes	1	Digital input	(8x) 1	-
0750-0438	-	1	Digital input	(2x) 1	-
0750-0439	-	59	8-channel digital input	(1x) 16	(1x) 16
0750-0450	-	62	4-channel analog input; Resistance measurement	(4x) 16	-
0750-0451	-	63	8-channel analog input	(8x) 16	-
0750-0452	yes	8	Analog input 16bit	(2x) 16	-
0750-0452/0000-0001	-	8	Analog input 16bit	(2x) 16	-
0750-0452/0000-0002	-	8	Analog input 16bit	(2x) 16	-
0750-0452/0000-0200	-	8	Analog input 16bit	(2x) 16	-
0750-0453	yes	8	Analog input 16bit	(4x) 16	-

Item Number	753	Type	Type Name	Data Width in Bits	
				I	Q
0750-0453/0040-0000	-	8	Analog input 16bit	(4x) 16	-
0750-0454	yes	8	Analog input 16bit	(2x) 16	-
0750-0454/0000-0001	-	8	Analog input 16bit	(2x) 16	-
0750-0454/0000-0002	-	8	Analog input 16bit	(2x) 16	-
0750-0454/0000-0200	-	8	Analog input 16bit	(2x) 16	-
0750-0454/0025-0000	-	8	Analog input 16bit	(2x) 16	-
0750-0455	yes	8	Analog input 16bit	(4x) 16	-
0750-0455/0020-0000	-	8	Analog input 16bit	(4x) 16	-
0750-0455/0025-0000	-	8	Analog input 16bit	(4x) 16	-
0750-0455/0040-0000	-	8	Analog input 16bit	(4x) 16	-
0750-0456	yes	8	Analog input 16bit	(2x) 16	-
0750-0456/0000-0200	-	8	Analog input 16bit	(2x) 16	-
0750-0457	yes	8	Analog input 16bit	(4x) 16	-
0750-0457/0040-0000	-	8	Analog input 16bit	(4x) 16	-
0750-0458	-	63	8-channel analog input	(8x) 16	-
0750-0459	yes	8	Analog input 16bit	(4x) 16	-
0750-0460	yes	44	Analog input signed Int16bit	(4x) 16	-
0750-0460/0000-0003	-	44	Analog input signed Int16bit	(4x) 16	-
0750-0460/0000-0005	-	44	Analog input signed Int16bit	(4x) 16	-
0750-0461	yes	44	Analog input signed Int16bit	(2x) 16	-
0750-0461/0000-0002	-	8	Analog input 16bit	(2x) 16	-
0750-0461/0000-0003	-	44	Analog input signed Int16bit	(2x) 16	-
0750-0461/0000-0004	-	44	Analog input signed Int16bit	(2x) 16	-
0750-0461/0000-0005	-	44	Analog input signed Int16bit	(2x) 16	-
0750-0461/0000-0006	yes	44	Analog input signed Int16bit	(2x) 16	-
0750-0461/0000-0007	-	8	Analog input 16bit	(2x) 16	-
0750-0461/0000-0009	yes	44	Analog input signed Int16bit	(2x) 16	-
0750-0461/0000-0010	-	44	Analog input signed Int16bit	(2x) 16	-
0750-0461/0000-0011	-	8	Analog input 16bit	(2x) 16	-
0750-0461/0000-0016	-	44	Analog input signed Int16bit	(2x) 16	-
0750-0461/0000-0200	-	44	Analog input signed Int16bit	(2x) 16	-
0750-0461/0000-0201	-	44	Analog input signed Int16bit	(2x) 16	-
0750-0461/0002-0000	-	44	Analog input signed Int16bit	(2x) 16	-
0750-0461/0003-0000	yes	44	Analog input signed Int16bit	(2x) 16	-
0750-0461/0020-0000	-	44	Analog input signed Int16bit	(2x) 16	-
0750-0461/0025-0000	-	44	Analog input signed Int16bit	(2x) 16	-
0750-0462	-	44	Analog input signed Int16bit	(2x) 16	-
0750-0462/0000-0002	-	44	Analog input signed Int16bit	(2x) 16	-
0750-0462/0000-0003	-	44	Analog input signed Int16bit	(2x) 16	-
0750-0462/0000-0006	-	44	Analog input signed Int16bit	(2x) 16	-
0750-0462/0000-0010	-	44	Analog input signed Int16bit	(2x) 16	-
0750-0462/0000-0050	-	44	Analog input signed Int16bit	(2x) 16	-
0750-0463	-	44	Analog input signed Int16bit	(4x) 16	-
0750-0464#02	-	44	Analog input signed Int16bit	(2x) 16	-
0750-0464#04	-	44	Analog input signed Int16bit	(4x) 16	-
0750-0464/0020-0000	yes	44	Analog input signed Int16bit	(4x) 16	-
0750-0464/0040-0000#02	-	44	Analog input signed Int16bit	(2x) 16	-
0750-0464/0040-0000#04	-	44	Analog input signed Int16bit	(4x) 16	-
0750-0465	yes	8	Analog input 16bit	(2x) 16	-
0750-0465/0000-0001	-	8	Analog input 16bit	(2x) 16	-
0750-0465/0000-0002	-	8	Analog input 16bit	(2x) 16	-
0750-0465/0000-0200	-	8	Analog input 16bit	(2x) 16	-
0750-0466	yes	8	Analog input 16bit	(2x) 16	-
0750-0466/0000-0001	-	8	Analog input 16bit	(2x) 16	-

Item Number	753	Type	Type Name	Data Width in Bits	
				I	Q
0750-0466/0000-0002	-	8	Analog input 16bit	(2x) 16	-
0750-0466/0000-0200	-	8	Analog input 16bit	(2x) 16	-
0750-0466/0025-0000	-	8	Analog input 16bit	(2x) 16	-
0750-0467	yes	8	Analog input 16bit	(2x) 16	-
0750-0467/0000-0001	-	8	Analog input 16bit	(2x) 16	-
0750-0467/0000-0200	-	8	Analog input 16bit	(2x) 16	-
0750-0468	-	8	Analog input 16bit	(4x) 16	-
0750-0468/0000-0001	-	8	Analog input 16bit	(4x) 16	-
0750-0468/0000-0200	-	8	Analog input 16bit	(4x) 16	-
0750-0468/0040-0000	-	8	Analog input 16bit	(4x) 16	-
0750-0469	yes	44	Analog input signed Int16bit	(2x) 16	-
0750-0469/0000-0001	-	44	Analog input signed Int16bit	(2x) 16	-
0750-0469/0000-0002	-	44	Analog input signed Int16bit	(2x) 16	-
0750-0469/0000-0003	-	44	Analog input signed Int16bit	(2x) 16	-
0750-0469/0000-0006	-	44	Analog input signed Int16bit	(2x) 16	-
0750-0469/0000-0007	-	44	Analog input signed Int16bit	(2x) 16	-
0750-0469/0000-0008	-	44	Analog input signed Int16bit	(2x) 16	-
0750-0469/0000-0009	-	44	Analog input signed Int16bit	(2x) 16	-
0750-0469/0000-0012	-	44	Analog input signed Int16bit	(2x) 16	-
0750-0469/0000-0013	-	44	Analog input signed Int16bit	(2x) 16	-
0750-0469/0000-0050	-	44	Analog input signed Int16bit	(2x) 16	-
0750-0469/0000-0051	-	44	Analog input signed Int16bit	(2x) 16	-
0750-0469/0000-0062	-	44	Analog input signed Int16bit	(2x) 16	-
0750-0469/0000-0200	-	44	Analog input signed Int16bit	(2x) 16	-
0750-0469/0000-0202	-	44	Analog input signed Int16bit	(2x) 16	-
0750-0469/0000-0206	-	44	Analog input signed Int16bit	(2x) 16	-
0750-0469/0003-0000	yes	44	Analog input signed Int16bit	(2x) 16	-
0750-0469/0040-0000	-	44	Analog input signed Int16bit	(2x) 16	-
0750-0470	-	8	Analog input 16bit	(2x) 16	-
0750-0470/0005-0000	-	8	Analog input 16bit	(2x) 16	-
0750-0472	yes	8	Analog input 16bit	(2x) 16	-
0750-0472/0000-0200	-	8	Analog input 16bit	(2x) 16	-
0750-0472/0005-0000	-	8	Analog input 16bit	(2x) 16	-
0750-0473	-	8	Analog input 16bit	(2x) 16	-
0750-0473/0005-0000	-	8	Analog input 16bit	(2x) 16	-
0750-0474	yes	8	Analog input 16bit	(2x) 16	-
0750-0474/0000-0002	-	8	Analog input 16bit	(2x) 16	-
0750-0474/0000-0200	-	8	Analog input 16bit	(2x) 16	-
0750-0474/0005-0000	-	8	Analog input 16bit	(2x) 16	-
0750-0474/0005-0200	-	8	Analog input 16bit	(2x) 16	-
0750-0475	yes	8	Analog input 16bit	(2x) 16	-
0750-0475/0020-0000	-	8	Analog input 16bit	(2x) 16	-
0750-0476	yes	8	Analog input 16bit	(2x) 16	-
0750-0476/0000-0200	-	8	Analog input 16bit	(2x) 16	-
0750-0476/0005-0000	-	8	Analog input 16bit	(2x) 16	-
0750-0477	yes	8	Analog input 16bit	(2x) 16	-
0750-0478	yes	8	Analog input 16bit	(2x) 16	-
0750-0478/0005-0000	-	8	Analog input 16bit	(2x) 16	-
0750-0479	yes	8	Analog input 16bit	(2x) 16	-
0750-0479/0000-0001	-	8	Analog input 16bit	(2x) 16	-
0750-0480	yes	8	Analog input 16bit	(2x) 16	-
0750-0480/0000-0001	-	8	Analog input 16bit	(2x) 16	-
0750-0481/0003-0000	-	44	Analog input signed Int16bit	(2x) 16	-
0750-0482#12	yes	49	2-channel analog input; 4 … 20 mA HART	(1x) 96	(1x) 96
0750-0482/0000-	-	49	2-channel analog input; 4 … 20 mA	(1x) 96	(1x) 96

Item Number	753	Type	Type Name	Data Width in Bits	
				I	Q
0300#12			HART		
0750-0483	yes	8	Analog input 16bit	(2x) 16	-
0750-0484#12	-	49	2-channel analog input; 4 … 20 mA HART	(1x) 96	(1x) 96
0750-0485	-	8	Analog input 16bit	(2x) 16	-
0750-0486	-	65	4-channel analog input; Diagnostics	(4x) 16	-
0750-0487/0003-0000	-	44	Analog input signed Int16bit	(2x) 16	-
0750-0491	-	9	Analog input; Resistor bridges (strain gauge)	(1x) 32	-
0750-0491/0000-0001	-	9	Analog input; Resistor bridges (strain gauge)	(1x) 32	-
0750-0492	yes	8	Analog input 16bit	(2x) 16	-
0750-0492/0040-0001	-	8	Analog input 16bit	(2x) 16	-
0750-0493	-	47	3-Phase Power Measurement type 1	(3x) 32	(3x) 32
0750-0493/0000-0001	-	47	3-Phase Power Measurement type 1	(3x) 32	(3x) 32
0750-0494	-	58	3-Phase Power Measurement type 2	(1x) 192	(1x) 192
0750-0494/0000-0001	-	58	3-Phase Power Measurement type 2	(1x) 192	(1x) 192
0750-0494/0025-0000	-	58	3-Phase Power Measurement type 2	(1x) 192	(1x) 192
0750-0494/0025-0001	-	58	3-Phase Power Measurement type 2	(1x) 192	(1x) 192
0750-0495	-	58	3-Phase Power Measurement type 2	(1x) 192	(1x) 192
0750-0495/0000-0001	-	58	3-Phase Power Measurement type 2	(1x) 192	(1x) 192
0750-0495/0000-0002	-	58	3-Phase Power Measurement type 2	(1x) 192	(1x) 192
0750-0495/0040-0000	-	58	3-Phase Power Measurement type 2	(1x) 192	(1x) 192
0750-0495/0040-0001	-	58	3-Phase Power Measurement type 2	(1x) 192	(1x) 192
0750-0495/0040-0002	-	58	3-Phase Power Measurement type 2	(1x) 192	(1x) 192
0750-0496	-	63	8-channel analog input	(8x) 16	-
0750-0497	-	63	8-channel analog input	(8x) 16	-
0750-0501	yes	10	Digital output	-	(2x) 1
0750-0502	yes	10	Digital output	-	(2x) 1
0750-0504	yes	10	Digital output	-	(4x) 1
0750-0504/0025-0000	-	10	Digital output	-	(4x) 1
0750-0506	yes	11	Digital output; Diagnostics type 1	(1x) 4	(1x) 4
0750-0507	-	12	Digital output; Diagnostics type 2	(2x) 1	(2x) 1
0750-0508	yes	12	Digital output; Diagnostics type 2	(2x) 1	(2x) 1
0750-0508/0040-0000	-	12	Digital output; Diagnostics type 2	(2x) 1	(2x) 1
0750-0509	yes	10	Digital output	-	(2x) 1
0750-0511	yes	13	Pulse width outputs	(2x) 24	(2x) 24
0750-0511/0000-0001	-	13	Pulse width outputs	(2x) 24	(2x) 24
0750-0511/0000-0002	-	13	Pulse width outputs	(2x) 24	(2x) 24
0750-0511/0000-0004	-	13	Pulse width outputs	(2x) 24	(2x) 24
0750-0511/0000-0005	-	13	Pulse width outputs	(2x) 24	(2x) 24
0750-0512	yes	10	Digital output	-	(2x) 1
0750-0513	yes	10	Digital output	-	(2x) 1
0750-0513/0000-0001	-	10	Digital output	-	(2x) 1
0750-0514	yes	10	Digital output	-	(2x) 1

Item Number	753	Type	Type Name	Data Width in Bits	
				I	Q
0750-0515	-	10	Digital output	-	(4x) 1
0750-0516	yes	10	Digital output	-	(4x) 1
0750-0517	yes	10	Digital output	-	(2x) 1
0750-0517/0040-0000	-	10	Digital output	-	(2x) 1
0750-0519	-	10	Digital output	-	(4x) 1
0750-0520	-	10	Digital output	-	(2x) 1
0750-0522	-	12	Digital output; Diagnostics type 2	(2x) 1	(2x) 1
0750-0523	-	26	1-channel digital output	(1x) 2	(1x) 2
0750-0523/0010-0000	-	26	1-channel digital output	(1x) 2	(1x) 2
0750-0530	yes	10	Digital output	-	(8x) 1
0750-0530/0025-0000	-	10	Digital output	-	(8x) 1
0750-0531	yes	10	Digital output	-	(4x) 1
0750-0532	-	12	Digital output; Diagnostics type 2	(4x) 1	(4x) 1
0750-0534	yes	10	Digital output	-	(8x) 1
0750-0535	-	10	Digital output	-	(2x) 1
0750-0536	yes	10	Digital output	-	(8x) 1
0750-0537	yes	12	Digital output; Diagnostics type 2	(8x) 1	(8x) 1
0750-0538	-	10	Digital output	-	(2x) 1
0750-0539	-	12	Digital output; Diagnostics type 2	(4x) 1	(4x) 1
0750-0550	yes	14	Analog output	-	(2x) 16
0750-0550/0000-0200	-	14	Analog output	-	(2x) 16
0750-0551	-	14	Analog output	-	(4x) 16
0750-0552	yes	14	Analog output	-	(2x) 16
0750-0552/0000-0002	-	14	Analog output	-	(2x) 16
0750-0552/0000-0200	-	14	Analog output	-	(2x) 16
0750-0553	yes	14	Analog output	-	(4x) 16
0750-0554	yes	14	Analog output	-	(2x) 16
0750-0554/0000-0200	-	14	Analog output	-	(2x) 16
0750-0555	yes	14	Analog output	-	(4x) 16
0750-0556	yes	14	Analog output	-	(2x) 16
0750-0556/0000-0200	-	14	Analog output	-	(2x) 16
0750-0557	yes	14	Analog output	-	(4x) 16
0750-0557/0040-0000	-	14	Analog output	-	(4x) 16
0750-0559	yes	14	Analog output	-	(4x) 16
0750-0559/0040-0000	-	14	Analog output	-	(4x) 16
0750-0560	-	14	Analog output	-	(2x) 16
0750-0562	-	14	Analog output	-	(2x) 16
0750-0563	-	14	Analog output	-	(2x) 16
0750-0563/0040-0000	-	14	Analog output	-	(2x) 16
0750-0585	-	14	Analog output	-	(2x) 16
0750-0586	-	14	Analog output	-	(2x) 16
0750-0597	-	64	8-channel analog output	-	(8x) 16
0750-0606	-	1	Digital input	(2x) 1	-
0750-0610	-	1	Digital input	(2x) 1	-
0750-0611	-	1	Digital input	(2x) 1	-
0750-0622#02	-	1	Digital input	(2x) 1	-
0750-0622#12	-	10	Digital output	-	(2x) 1
0750-0630	-	15	SSI transmitter interface	(1x) 32	-
0750-0630/0000-0001	-	15	SSI transmitter interface	(1x) 32	-
0750-0630/0000-0002	-	15	SSI transmitter interface	(1x) 32	-
0750-0630/0000-0004	-	15	SSI transmitter interface	(1x) 32	-
0750-0630/0000-0005	-	15	SSI transmitter interface	(1x) 32	-
0750-0630/0000-0006	yes	15	SSI transmitter interface	(1x) 32	-
0750-0630/0000-0007	-	15	SSI transmitter interface	(1x) 32	-
0750-0630/0000-0008	-	15	SSI transmitter interface	(1x) 32	-
0750-0630/0000-0009	-	15	SSI transmitter interface	(1x) 32	-

Item Number	753	Type	Type Name	Data Width in Bits	
				I	Q
0750-0630/0000-0011	-	15	SSI transmitter interface	(1x) 32	-
0750-0630/0000-0012	-	15	SSI transmitter interface	(1x) 32	-
0750-0630/0000-0013	-	15	SSI transmitter interface	(1x) 32	-
0750-0630/0003-0000	-	15	SSI transmitter interface	(1x) 32	-
0750-0631	-	16	Incremental encoder interface type 1	(1x) 48	(1x) 48
0750-0631/0000-0004	-	51	Incremental encoder interface type 4	(1x) 48	(1x) 48
0750-0631/0000-0010	-	51	Incremental encoder interface type 4	(1x) 48	(1x) 48
0750-0631/0000-0011	-	51	Incremental encoder interface type 4	(1x) 48	(1x) 48
0750-0632#12	-	61	Proportional Valve Module 12 Bytes	(1x) 96	(1x) 96
0750-0632#6	-	60	Proportional Valve Module 6 Bytes	(1x) 48	(1x) 48
0750-0632/0000-0100#12	-	61	Proportional Valve Module 12 Bytes	(1x) 96	(1x) 96
0750-0632/0000-0100#6	-	60	Proportional Valve Module 6 Bytes	(1x) 48	(1x) 48
0750-0633#01	-	52	Up/down counter 32 bits	(1x) 48	(1x) 48
0750-0633#02	-	52	Up/down counter 32 bits	(1x) 48	(1x) 48
0750-0633#03	-	53	Frequency Counter type 2	(1x) 48	(1x) 48
0750-0633#04	-	54	Peak Time Counter type 2	(1x) 48	(1x) 48
0750-0634	-	17	Incremental encoder interface type 2	(1x) 48	(1x) 48
0750-0635	yes	18	Digital Impulse Interface	(1x) 32	(1x) 32
0750-0636	-	48	DC Drive Controller	(1x) 48	(1x) 48
0750-0636/0000-0700	-	48	DC Drive Controller	(1x) 48	(1x) 48
0750-0636/0000-0800	-	48	DC Drive Controller	(1x) 48	(1x) 48
0750-0637	-	19	Incremental encoder interface type 3	(1x) 48	(1x) 48
0750-0637/0000-0001	-	19	Incremental encoder interface type 3	(1x) 48	(1x) 48
0750-0637/0000-0002	-	19	Incremental encoder interface type 3	(1x) 48	(1x) 48
0750-0637/0000-0003	-	19	Incremental encoder interface type 3	(1x) 48	(1x) 48
0750-0638	yes	20	Up/down counter 16 bits	(2x) 24	(2x) 24
0750-0639	-	47	3-Phase Power Measurement type 1	(1x) 32	(1x) 32
0750-0640	-	43	Real-time clock Module	(1x) 48	(1x) 48
0750-0641	-	36	DALI/DSI master module	(1x) 48	(1x) 48
0750-0642	-	37	Radio Receiver EnOcean	(1x) 32	(1x) 32
0750-0643	-	38	MP-Bus Master	(1x) 64	(1x) 64
0750-0644#12	-	28	12 Bytes Generic IN/OUT	(1x) 96	(1x) 96
0750-0644#24	-	30	24 Bytes Generic IN/OUT	(1x) 192	(1x) 192
0750-0644#48	-	33	48 Bytes Generic IN/OUT	(1x) 384	(1x) 384
0750-0645	-	46	VIB I/O	(4x) 24	(4x) 24
0750-0650	-	21	Serial Interface 3 Bytes	(1x) 32	(1x) 32
0750-0650#03	yes	21	Serial Interface 3 Bytes	(1x) 32	(1x) 32
0750-0650#05	yes	22	Serial Interface 5 Bytes	(1x) 48	(1x) 48
0750-0650/0000-0001	-	22	Serial Interface 5 Bytes	(1x) 48	(1x) 48
0750-0650/0000-0002	-	21	Serial Interface 3 Bytes	(1x) 32	(1x) 32
0750-0650/0000-0003	-	21	Serial Interface 3 Bytes	(1x) 32	(1x) 32
0750-0650/0000-0004	-	21	Serial Interface 3 Bytes	(1x) 32	(1x) 32
0750-0650/0000-0006	-	21	Serial Interface 3 Bytes	(1x) 32	(1x) 32
0750-0650/0000-0007	-	21	Serial Interface 3 Bytes	(1x) 32	(1x) 32
0750-0650/0000-0009	-	21	Serial Interface 3 Bytes	(1x) 32	(1x) 32

Item Number	753	Type	Type Name	Data Width in Bits	
				I	Q
0750-0650/0000-0010	-	21	Serial Interface 3 Bytes	(1x) 32	(1x) 32
0750-0650/0000-0011	-	21	Serial Interface 3 Bytes	(1x) 32	(1x) 32
0750-0650/0000-0012	-	21	Serial Interface 3 Bytes	(1x) 32	(1x) 32
0750-0650/0000-0013	-	21	Serial Interface 3 Bytes	(1x) 32	(1x) 32
0750-0650/0000-0014	-	22	Serial Interface 5 Bytes	(1x) 48	(1x) 48
0750-0650/0000-0015	-	22	Serial Interface 5 Bytes	(1x) 48	(1x) 48
0750-0650/0000-0016	-	22	Serial Interface 5 Bytes	(1x) 48	(1x) 48
0750-0650/0000-0018	-	22	Serial Interface 5 Bytes	(1x) 48	(1x) 48
0750-0650/0000-0022	-	22	Serial Interface 5 Bytes	(1x) 48	(1x) 48
0750-0650/0000-0025	-	22	Serial Interface 5 Bytes	(1x) 48	(1x) 48
0750-0650/0003-0000#03	yes	21	Serial Interface 3 Bytes	(1x) 32	(1x) 32
0750-0650/0003-0000#05	yes	22	Serial Interface 5 Bytes	(1x) 48	(1x) 48
0750-0651	-	21	Serial Interface 3 Bytes	(1x) 32	(1x) 32
0750-0651#03	-	21	Serial Interface 3 Bytes	(1x) 32	(1x) 32
0750-0651#05	-	22	Serial Interface 5 Bytes	(1x) 48	(1x) 48
0750-0651/0000-0001	-	22	Serial Interface 5 Bytes	(1x) 48	(1x) 48
0750-0651/0000-0002	-	21	Serial Interface 3 Bytes	(1x) 32	(1x) 32
0750-0651/0000-0003	-	21	Serial Interface 3 Bytes	(1x) 32	(1x) 32
0750-0651/0000-0004	-	21	Serial Interface 3 Bytes	(1x) 32	(1x) 32
0750-0651/0000-0005	-	21	Serial Interface 3 Bytes	(1x) 32	(1x) 32
0750-0651/0000-0006	-	21	Serial Interface 3 Bytes	(1x) 32	(1x) 32
0750-0651/0000-0007	-	22	Serial Interface 5 Bytes	(1x) 48	(1x) 48
0750-0652#08	-	40	8 Bytes Generic IN/OUT	(1x) 64	(1x) 64
0750-0652#24	-	30	24 Bytes Generic IN/OUT	(1x) 192	(1x) 192
0750-0652#48	-	33	48 Bytes Generic IN/OUT	(1x) 384	(1x) 384
0750-0652/0040-0000#08	-	40	8 Bytes Generic IN/OUT	(1x) 64	(1x) 64
0750-0652/0040-0000#24	-	30	24 Bytes Generic IN/OUT	(1x) 192	(1x) 192
0750-0652/0040-0000#48	-	33	48 Bytes Generic IN/OUT	(1x) 384	(1x) 384
0750-0653	-	21	Serial Interface 3 Bytes	(1x) 32	(1x) 32
0750-0653#03	yes	21	Serial Interface 3 Bytes	(1x) 32	(1x) 32
0750-0653#05	yes	22	Serial Interface 5 Bytes	(1x) 48	(1x) 48
0750-0653/0000-0001	-	21	Serial Interface 3 Bytes	(1x) 32	(1x) 32
0750-0653/0000-0002	-	21	Serial Interface 3 Bytes	(1x) 32	(1x) 32
0750-0653/0000-0005	-	21	Serial Interface 3 Bytes	(1x) 32	(1x) 32
0750-0653/0000-0006	-	22	Serial Interface 5 Bytes	(1x) 48	(1x) 48
0750-0653/0000-0007	-	21	Serial Interface 3 Bytes	(1x) 32	(1x) 32
0750-0653/0000-0009	-	22	Serial Interface 5 Bytes	(1x) 48	(1x) 48
0750-0653/0000-0011	-	22	Serial Interface 5 Bytes	(1x) 48	(1x) 48
0750-0653/0000-0018	yes	22	Serial Interface 5 Bytes	(1x) 48	(1x) 48
0750-0653/0000-0020	-	22	Serial Interface 5 Bytes	(1x) 48	(1x) 48
0750-0653/0000-0021	-	22	Serial Interface 5 Bytes	(1x) 48	(1x) 48
0750-0653/0000-0022	-	22	Serial Interface 5 Bytes	(1x) 48	(1x) 48
0750-0653/0003-0000#03	yes	21	Serial Interface 3 Bytes	(1x) 32	(1x) 32
0750-0653/0003-0000#05	yes	22	Serial Interface 5 Bytes	(1x) 48	(1x) 48
0750-0653/0003-0001#03	-	21	Serial Interface 3 Bytes	(1x) 32	(1x) 32
0750-0653/0003-0001#05	-	22	Serial Interface 5 Bytes	(1x) 48	(1x) 48
0750-0653/0025-0000#03	-	21	Serial Interface 3 Bytes	(1x) 32	(1x) 32

Item Number	753	Type	Type Name	Data Width in Bits	
				I	Q
0750-0653/0025-0000#05	-	22	Serial Interface 5 Bytes	(1x) 48	(1x) 48
0750-0653/0025-0018	-	22	Serial Interface 5 Bytes	(1x) 48	(1x) 48
0750-0654	-	23	Serial Data Exchange Interface	(1x) 32	(1x) 32
0750-0654/0000-0001	-	23	Serial Data Exchange Interface	(1x) 32	(1x) 32
0750-0655#12	yes	28	12 Bytes Generic IN/OUT	(1x) 96	(1x) 96
0750-0655#20	yes	29	20 Bytes Generic IN/OUT	(1x) 160	(1x) 160
0750-0655#24	yes	30	24 Bytes Generic IN/OUT	(1x) 192	(1x) 192
0750-0655#32	yes	31	32 Bytes Generic IN/OUT	(1x) 256	(1x) 256
0750-0655#40	yes	32	40 Bytes Generic IN/OUT	(1x) 320	(1x) 320
0750-0655#48	yes	33	48 Bytes Generic IN/OUT	(1x) 384	(1x) 384
0750-0657#04	-	42	4 Bytes Generic IN/OUT	(1x) 32	(1x) 32
0750-0657#06	-	41	6 Bytes Generic IN/OUT	(1x) 48	(1x) 48
0750-0657#08	-	40	8 Bytes Generic IN/OUT	(1x) 64	(1x) 64
0750-0657#10	-	39	10 Bytes Generic IN/OUT	(1x) 80	(1x) 80
0750-0657#12	-	28	12 Bytes Generic IN/OUT	(1x) 96	(1x) 96
0750-0657#16	-	56	16 Bytes Generic IN/OUT	(1x) 128	(1x) 128
0750-0657#24	-	30	24 Bytes Generic IN/OUT	(1x) 192	(1x) 192
0750-0658#08	-	40	8 Bytes Generic IN/OUT	(1x) 64	(1x) 64
0750-0658#12	-	28	12 Bytes Generic IN/OUT	(1x) 96	(1x) 96
0750-0658#16	-	56	16 Bytes Generic IN/OUT	(1x) 128	(1x) 128
0750-0658#20	-	29	20 Bytes Generic IN/OUT	(1x) 160	(1x) 160
0750-0658#24	-	30	24 Bytes Generic IN/OUT	(1x) 192	(1x) 192
0750-0658#32	-	31	32 Bytes Generic IN/OUT	(1x) 256	(1x) 256
0750-0658#40	-	32	40 Bytes Generic IN/OUT	(1x) 320	(1x) 320
0750-0658#48	-	33	48 Bytes Generic IN/OUT	(1x) 384	(1x) 384
0750-0670	yes	45	Stepper Controller	(1x) 96	(1x) 96
0750-0671	yes	45	Stepper Controller	(1x) 96	(1x) 96
0750-0672	-	45	Stepper Controller	(1x) 96	(1x) 96
0750-0673	-	45	Stepper Controller	(1x) 96	(1x) 96
0750-1400	-	1	Digital input	(16x) 1	-
0750-1402	-	1	Digital input	(16x) 1	-
0750-1405	-	1	Digital input	(16x) 1	-
0750-1405/0040-0000	-	1	Digital input	(16x) 1	-
0750-1406	-	1	Digital input	(16x) 1	-
0750-1407	-	1	Digital input	(16x) 1	-
0750-1415	-	1	Digital input	(8x) 1	-
0750-1415/0040-0000	-	1	Digital input	(8x) 1	-
0750-1416	-	1	Digital input	(8x) 1	-
0750-1416/0040-0000	-	1	Digital input	(8x) 1	-
0750-1417	-	1	Digital input	(8x) 1	-
0750-1418	-	1	Digital input	(8x) 1	-
0750-1420	-	1	Digital input	(4x) 1	-
0750-1421	-	1	Digital input	(4x) 1	-
0750-1422	-	1	Digital input	(4x) 1	-
0750-1423	-	1	Digital input	(4x) 1	-
0750-1425	-	59	8-channel digital input	(1x) 16	(1x) 16
0750-1500	-	10	Digital output	-	(16x) 1
0750-1501	-	10	Digital output	-	(16x) 1
0750-1502	-	34	Digital input/output	(8x) 1	(8x) 1
0750-1504	-	10	Digital output	-	(16x) 1
0750-1505	-	10	Digital output	-	(16x) 1
0750-1506	-	34	Digital input/output	(8x) 1	(8x) 1
0750-1515	-	10	Digital output	-	(8x) 1
0750-1515/0040-0000	-	10	Digital output	-	(8x) 1
0750-1516	-	10	Digital output	-	(8x) 1

Item Number	753	Type	Type Name	Data Width in Bits	
				I	Q
0753-0429	-	1	Digital input	(2x) 1	-
0753-0434	-	1	Digital input	(8x) 1	-
0753-0440	-	1	Digital input	(4x) 1	-
0753-0646	-	30	24 Bytes Generic IN/OUT	(1x) 192	(1x) 192
0753-0647	-	30	24 Bytes Generic IN/OUT	(1x) 192	(1x) 192
0753-0647#01	-	57	DALI Multi-Master	(1x) 192	(1x) 192
0753-0648	-	55	LON-FTT Interface	(1x) 192	(1x) 192

10.2.3 Type 1 - Digital input

Occupied input process image [(channel x) bits]: (2x) 1
Occupied output process image [(channel x) bits]: -

Items that use this mapping type:

0750-0400, 0750-0400/0025-0000, 0750-0401, 0753-0401, 0750-0402, 0753-0402, 0750-0402/0025-0000, 0750-0403, 0753-0403, 0750-0405, 0753-0405, 0750-0406, 0753-0406, 0750-0407/0040-0000, 0750-0408, 0753-0408, 0750-0409, 0753-0409, 0750-0410, 0753-0410, 0750-0411, 0753-0411, 0750-0412, 0753-0412, 0750-0412/0000-0001, 0753-0412/0000-0001, 0750-0414, 0750-0415, 0753-0415, 0750-0416, 0750-0422, 0753-0422, 0750-0423, 0753-0423, 0750-0427, 0753-0427, 0750-0427/0040-0000, 0750-0428, 0753-0428, 0750-0429/0040-0001, 0750-0430, 0753-0430, 0750-0430/0025-0000, 0750-0431, 0753-0431, 0750-0432, 0753-0432, 0750-0433, 0753-0433, 0750-0436, 0753-0436, 0750-0437, 0753-0437, 0750-0438, 0750-0606, 0750-0610, 0750-0611, 0750-0622#02, 0750-1400, 0750-1402, 0750-1405, 0750-1405/0040-0000, 0750-1406, 0750-1407, 0750-1415, 0750-1415/0040-0000, 0750-1416, 0750-1416/0040-0000, 0750-1417, 0750-1418, 0750-1420, 0750-1421, 0750-1422, 0750-1423, 0753-0429, 0753-0434, 0753-0440

Data mapping:

I/Q	Byte	Bit	Data Type	Contents
I	0	0	BOOL	Digital input

10.2.4 Type 2 - Up Counter

Occupied input process image [(channel x) bits]: (1x) 48
Occupied output process image [(channel x) bits]: (1x) 48

Items that use this mapping type:

0750-0404, 0750-0404/0000-0001

Data mapping:

I/Q	Byte	Bit	Data Type	Contents
I	0	0	BOOL	Status clock
I	0	1	BOOL	Status up/down
I	0	2	BOOL	Status out 1
I	0	3	BOOL	Status out 2
I	0	4	BOOL	Status block counter
I	0	5	BOOL	Status set counter
I	2		WORD	Actual count value Low Word
I	4		WORD	Actual count value High Word
Q	0	2	BOOL	Control out 1
Q	0	3	BOOL	Control out 2
Q	0	4	BOOL	Control block counter
Q	0	5	BOOL	Control set counter
Q	2		WORD	Set value Low Word
Q	4		WORD	Set value High Word

10.2.5 Type 3 - Peak Time Counter type 1

Occupied input process image [(channel x) bits]: (1x) 48
Occupied output process image [(channel x) bits]: (1x) 48

Items that use this mapping type:

0750-0404/0000-0002

Data mapping:

I/Q	Byte	Bit	Data Type	Contents
I	0	0	BOOL	Toggle bit
I	0	1	BOOL	Status up/down
I	0	2	BOOL	Status out 1
I	0	3	BOOL	Status out 2
I	0	5	BOOL	Confirmation start count pulse acquisition
I	2		WORD	Actual count value Low Word
I	4		WORD	Actual count value High Word
Q	0	2	BOOL	Control out 1
Q	0	3	BOOL	Control out 2
Q	0	5	BOOL	Control bit start count pulse acquisition
Q	2		WORD	Set value Low Word
Q	4		WORD	Set value High Word

10.2.6 Type 4 - Frequency Counter type 1

Occupied input process image [(channel x) bits]: (1x) 48
Occupied output process image [(channel x) bits]: (1x) 48

Items that use this mapping type:

0750-0404/0000-0003

Data mapping (for symmetrical channels, only the first channel is specified):

I/Q	Byte	Bit	Data Type	Contents
I	0	0	BOOL	Frequency measuring range
I	0	1	BOOL	Frequency measuring range
I	0	2	BOOL	Status out 1
I	0	3	BOOL	Status out 2
I	0	4	BOOL	Tvd Acknowledge
I	0	5	BOOL	Status Gate input
I	2		WORD	Frequency Low Word
I	4		WORD	Frequency High Word
Q	0	0	BOOL	Acknowledgment frequency range
Q	0	1	BOOL	Acknowledgment frequency range
Q	0	2	BOOL	Control out 1
Q	0	3	BOOL	Control out 2
Q	0	4	BOOL	Tvd Request
Q	2		WORD	Watchdog Time

10.2.7 Type 5 - 2 up counter; 16 bits

Occupied input process image [(channel x) bits]: (1x) 48
Occupied output process image [(channel x) bits]: (1x) 48

Items that use this mapping type:

0750-0404/0000-0005

Data mapping (for symmetrical channels, only the first channel is specified):

I/Q	Byte	Bit	Data Type	Contents
I	0	0	BOOL	Status clock
I	0	1	BOOL	Status up/down
I	0	2	BOOL	Status out 1
I	0	3	BOOL	Status out 2
I	0	4	BOOL	Status bit accept set value 2
I	0	5	BOOL	Status bit accept set value 1
I	2		WORD	Actual count value 1
I	4		WORD	Actual count value 2
Q	0	2	BOOL	control out 1
Q	0	3	BOOL	control out 2
Q	0	4	BOOL	Control bit accept set value 2
Q	0	5	BOOL	Control bit accept set value 1
Q	2		WORD	set count value 1
Q	4		WORD	set count value 2

10.2.8 Type 6 - 2-channel digital input; Acknowledgement; Diagnostics

Occupied input process image [(channel x) bits]: (1x) 4
Occupied output process image [(channel x) bits]: (1x) 4

Items that use this mapping type:

0750-0418

Data mapping (for symmetrical channels, only the first channel is specified):

I/Q	Byte	Bit	Data Type	Contents
I	0	0	BOOL	Digital input
I	0	1	BOOL	Digital input
I	0	2	BOOL	Diagnostic
I	0	3	BOOL	Diagnostic
Q	0	2	BOOL	Reset diagnostic
Q	0	3	BOOL	Reset diagnostic

10.2.9 Type 7 - 2-channel digital input; Diagnostics

Occupied input process image [(channel x) bits]: (1x) 4
Occupied output process image [(channel x) bits]: -

Items that use this mapping type:

0750-0419, 0750-0421, 0753-0421, 0750-0425, 0753-0425

Data mapping (for symmetrical channels, only the first channel is specified):

I/Q	Byte	Bit	Data Type	Contents
I	0	0	BOOL	Digital input
I	0	1	BOOL	Digital input
I	0	2	BOOL	Diagnostic
I	0	3	BOOL	Diagnostic

10.2.10 Type 8 - Analog input 16bit

Occupied input process image [(channel x) bits]: (2x) 16
Occupied output process image [(channel x) bits]: -

Items that use this mapping type:

0750-0452, 0750-0452/0000-0001, 0750-0452/0000-0002, 0750-0452/0000-0200, 0750-0453, 0753-0453, 0750-0453/0040-0000, 0750-0454, 0753-0454, 0750-0454/0000-0001, 0750-0454/0000-0002, 0750-0454/0000-0200, 0750-0454/0025-0000, 0750-0455, 0753-0455, 0750-0455/0020-0000, 0750-0455/0025-0000, 0750-0455/0040-0000, 0750-0456, 0753-0456, 0750-0456/0000-0200, 0750-0457, 0753-0457, 0750-0457/0040-0000, 0750-0459, 0753-0459, 0750-0461/0000-0002, 0750-0461/0000-0007, 0750-0461/0000-0011, 0750-0465, 0753-0465, 0750-0465/0000-0001, 0750-0465/0000-0002, 0750-0465/0000-0200, 0750-0466, 0753-0466, 0750-0466/0000-0001, 0750-0466/0000-0002, 0750-0466/0000-0200, 0750-0466/0025-0000, 0750-0467, 0753-0467, 0750-0467/0000-0001, 0750-0467/0000-0200, 0750-0468, 0750-0468/0000-0001, 0750-0468/0000-0200, 0750-0468/0040-0000, 0750-0470, 0750-0470/0005-0000, 0750-0472, 0753-0472, 0750-0472/0000-0200, 0750-0472/0005-0000, 0750-0473, 0750-0473/0005-0000, 0750-0474, 0753-0474, 0750-0474/0000-0002, 0750-0474/0000-0200, 0750-0474/0005-0000, 0750-0474/0005-0200, 0750-0475, 0753-0475, 0750-0475/0020-0000, 0750-0476, 0753-0476, 0750-0476/0000-0200, 0750-0476/0005-0000, 0750-0477, 0753-0477, 0750-0478, 0753-0478, 0750-0478/0005-0000, 0750-0479, 0753-0479, 0750-0479/0000-0001, 0750-0480, 0753-0480, 0750-0480/0000-0001, 0750-0483, 0753-0483, 0750-0485, 0750-0492, 0753-0492, 0750-0492/0040-0001

Data mapping:

I/Q	Byte	Bit	Data Type	Contents
I	0		WORD	Input word

10.2.11 Type 9 - Analog input; Resistor bridges (strain gauge)

Occupied input process image [(channel x) bits]: (1x) 32
Occupied output process image [(channel x) bits]: -

Items that use this mapping type:

0750-0491, 0750-0491/0000-0001

Data mapping (for symmetrical channels, only the first channel is specified):

I/Q	Byte	Bit	Data Type	Contents
I	0		WORD	Bridge voltage
I	2		WORD	Reference voltage

10.2.12 Type 10 - Digital output

Occupied input process image [(channel x) bits]: -
Occupied output process image [(channel x) bits]: (2x) 1

Items that use this mapping type:

0750-0501, 0750-0502, 0753-0502, 0750-0504, 0753-0504, 0750-0504/0025-0000, 0750-0509, 0753-0509, 0750-0512, 0753-0512, 0750-0513, 0753-0513, 0750-0513/0000-0001, 0750-0514, 0753-0514, 0750-0515, 0750-0516, 0753-0516, 0750-0517, 0753-0517, 0750-0517/0040-0000, 0750-0519, 0750-0520, 0750-0530, 0753-0530, 0750-0530/0025-0000, 0750-0531, 0753-0531, 0750-0534, 0753-0534, 0750-0535, 0750-0536, 0753-0536, 0750-0538, 0750-0622#12, 0750-1500, 0750-1501, 0750-1504, 0750-1505, 0750-1515, 0750-1515/0040-0000, 0750-1516

Data mapping (for symmetrical channels, only the first channel is specified):

I/Q	Byte	Bit	Data Type	Contents
Q	0	0	BOOL	Digital output

10.2.13 Type 11 - Digital output; Diagnostics type 1

Occupied input process image [(channel x) bits]: (1x) 4
Occupied output process image [(channel x) bits]: (1x) 4

Items that use this mapping type:

0750-0506

Data mapping (for symmetrical channels, only the first channel is specified):

I/Q	Byte	Bit	Data Type	Contents
I	0	0	BOOL	Channel 1 Diagnostic bit 0
I	0	1	BOOL	Channel 1 Diagnostic bit 1
I	0	2	BOOL	Channel 2 Diagnostic bit 0
I	0	3	BOOL	Channel 2 Diagnostic bit 1
Q	0	0	BOOL	Digital output 1
Q	0	1	BOOL	Digital output 2

10.2.14 Type 12 - Digital output; Diagnostics type 2

Occupied input process image [(channel x) bits]: (2x) 1
Occupied output process image [(channel x) bits]: (2x) 1

Items that use this mapping type:

0750-0507, 0750-0508, 0753-0508, 0750-0508/0040-0000, 0750-0522, 0750-0532, 0750-0537, 0753-0537, 0750-0539

Data mapping (for symmetrical channels, only the first channel is specified):

I/Q	Byte	Bit	Data Type	Contents
I	0	0	BOOL	Diagnostic bit
Q	0	0	BOOL	Digital output

10.2.15 Type 13 - Pulse width outputs

Occupied input process image [(channel x) bits]: (2x) 24
Occupied output process image [(channel x) bits]: (2x) 24

Items that use this mapping type:

0750-0511, 0750-0511/0000-0001, 0750-0511/0000-0002, 0750-0511/0000-0004, 0750-0511/0000-0005

Data mapping (for symmetrical channels, only the first channel is specified):

I/Q	Byte	Bit	Data Type	Contents
I	0		BYTE	Status byte
I	1		BYTE	Input word Low Byte
I	2		BYTE	Input word High Byte
Q	0		BYTE	Control byte
Q	1		BYTE	Output word Low Byte
Q	2		BYTE	Output word High Byte

10.2.16 Type 14 - Analog output

Occupied input process image [(channel x) bits]: -
Occupied output process image [(channel x) bits]: (2x) 16

Items that use this mapping type:

0750-0550, 0750-0550/0000-0200, 0750-0551, 0750-0552, 0753-0552, 0750-0552/0000-0002, 0750-0552/0000-0200, 0750-0553, 0753-0553, 0750-0554, 0753-0554, 0750-0554/0000-0200, 0750-0555, 0753-0555, 0750-0556, 0753-0556, 0750-0556/0000-0200, 0750-0557, 0753-0557, 0750-0557/0040-0000, 0750-0559, 0753-0559, 0750-0559/0040-0000, 0750-0560, 0750-0562, 0750-0563, 0750-0563/0040-0000, 0750-0585, 0750-0586

Data mapping:

I/Q	Byte	Bit	Data Type	Contents
Q	0		WORD	Analog output

10.2.17 Type 15 - SSI transmitter interface

Occupied input process image [(channel x) bits]: (1x) 32
Occupied output process image [(channel x) bits]: -

Items that use this mapping type:

0750-0630, 0750-0630/0000-0001, 0750-0630/0000-0002, 0750-0630/0000-0004, 0750-0630/0000-0005, 0750-0630/0000-0006, 0753-0630/0000-0006, 0750-0630/0000-0007, 0750-0630/0000-0008, 0750-0630/0000-0009, 0750-0630/0000-0011, 0750-0630/0000-0012, 0750-0630/0000-0013, 0750-0630/0003-0000

Data mapping:

I/Q	Byte	Bit	Data Type	Contents
I	0		WORD	Actual value Low Word
I	2		WORD	Actual value High Word

10.2.18 Type 16 - Incremental encoder interface type 1

Occupied input process image [(channel x) bits]: (1x) 48
Occupied output process image [(channel x) bits]: (1x) 48

Items that use this mapping type:

0750-0631

Data mapping:

I/Q	Byte	Bit	Data Type	Contents
I	0	0	BOOL	Latched Data Set
I	0	1	BOOL	External Latch Ack.
I	0	2	BOOL	Counter Set Acknowledge
I	0	3	BOOL	Counter Underflow
I	0	4	BOOL	Counter Overflow
I	1		BYTE	Counter value Low Byte
I	2		BYTE	Counter value High Byte
I	4		WORD	Latch value
Q	0	0	BOOL	Release Index Pulse
Q	0	1	BOOL	Release Latch
Q	0	2	BOOL	Counter Set
Q	1		BYTE	Set value Low Byte
Q	2		BYTE	Set value High Byte

10.2.19 Type 17 - Incremental encoder interface type 2

Occupied input process image [(channel x) bits]: (1x) 48
Occupied output process image [(channel x) bits]: (1x) 48

Items that use this mapping type:

0750-0634

Data mapping:

I/Q	Byte	Bit	Data Type	Contents
I	0	0	BOOL	Latch value set
I	0	1	BOOL	D2/3/4 = Cycle duration
I	0	2	BOOL	Counter Set Acknowledge
I	0	3	BOOL	Counter Underflow
I	0	4	BOOL	Counter Overflow
I	1		BYTE	Counter value Low Byte
I	2		BYTE	Counter value High Byte
I	3	0	BYTE	Cycle duration byte 2 (MSB)
I	4		WORD	Latch value / Cycle duration Lo-Word
Q	0	0	BOOL	Release Index Pulse
Q	0	1	BOOL	Read cycle time
Q	0	2	BOOL	Counter Set
Q	1		BYTE	Set value Low Byte
Q	2		BYTE	Set value High Byte

10.2.20 Type 18 - Digital Impulse Interface

Occupied input process image [(channel x) bits]: (1x) 32
Occupied output process image [(channel x) bits]: (1x) 32

Items that use this mapping type:

0750-0635

Data mapping:

I/Q	Byte	Bit	Data Type	Contents
I	0	0	BOOL	Underflow
I	0	2	BOOL	speed acknowledge
I	0	3	BOOL	Zeron acknowledge
I	0	4	BOOL	Number of magnets coded
I	0	5	BOOL	Number of magnets coded
I	0	6	BOOL	Error
I	1		BYTE	In Data Value byte 0
I	2		BYTE	In Data Value byte 1
I	3		BYTE	In Data Value byte 2
Q	0	0	BOOL	Reset
Q	0	1	BOOL	Set Number of magnets
Q	0	2	BOOL	Set wave velocity
Q	0	3	BOOL	Set zero
Q	0	4	BOOL	Number of coded magnets Bit 0
Q	0	5	BOOL	Number of coded magnets Bit 1
Q	1		BYTE	Set value byte 0
Q	2		BYTE	Set value byte 1
Q	3		BYTE	Set value byte 2

10.2.21 Type 19 - Incremental encoder interface type 3

Occupied input process image [(channel x) bits]: (1x) 48
Occupied output process image [(channel x) bits]: (1x) 48

Items that use this mapping type:

0750-0637, 0750-0637/0000-0001, 0750-0637/0000-0002, 0750-0637/0000-0003

Data mapping (for symmetrical channels, only the first channel is specified):

I/Q	Byte	Bit	Data Type	Contents
I	0	0	BOOL	Confirmation of initial point activation
I	0	1	BOOL	External Latch Ack.
I	0	2	BOOL	Counter Set Acknowledge
I	0	3	BOOL	Counter Underflow
I	0	4	BOOL	Counter Overflow
I	0	5	BOOL	Counter Set Acknowledge
I	1		BYTE	IN Data Value Byte 0
I	2		BYTE	IN Data Value Byte 1
I	3	0	BOOL	State process data coding Bit 0
I	3	1	BOOL	State process data coding Bit 1
I	3	2	BOOL	State Cam 1
I	3	3	BOOL	State Cam 2
I	3	4	BOOL	Cam 1 active
I	3	5	BOOL	Cam 2 active
I	4		BYTE	IN Data Value Byte 2
I	5		BYTE	IN Data Value Byte 3
Q	0	0	BOOL	Release Index Pulse
Q	0	1	BOOL	Releas Latched Data
Q	0	2	BOOL	Counter Set
Q	0	3	BOOL	Underflow Reset
Q	0	4	BOOL	Overflow Reset
Q	0	5	BOOL	Set load external
Q	0	6	BOOL	Operation mode
Q	1		BYTE	IN Data Set Value Byte 0
Q	2		BYTE	IN Data Set Value Byte 1
Q	3	0	BOOL	Code Process Data
Q	3	1	BOOL	Code Process Data
Q	3	2	BOOL	Disable Cam 1
Q	3	3	BOOL	Disable Cam 2
Q	3	4	BOOL	Cam 1 set comparison values
Q	3	5	BOOL	Cam 2 set comparison values
Q	3	6	BOOL	Input REF Set
Q	4		BYTE	IN Data Set Value Byte 2
Q	5		BYTE	IN Data Set Value Byte 3

10.2.22 Type 20 - Up/down counter 16 bits

Occupied input process image [(channel x) bits]: (2x) 24
Occupied output process image [(channel x) bits]: (2x) 24

Items that use this mapping type:

0750-0638

Data mapping:

I/Q	Byte	Bit	Data Type	Contents
I	0	0	BOOL	Overflow locked/allowed
I	0	1	BOOL	Counter up/down
I	0	4	BOOL	Counter locked/count
I	0	5	BOOL	Counter (set and hold)/mode
I	1		BYTE	Counter value Low Byte
I	2		BYTE	Counter value High Byte
Q	0	0	BOOL	Lock overflow
Q	0	1	BOOL	Set counter mode forward/backwards
Q	0	4	BOOL	Set counter lock/count
Q	0	5	BOOL	Set counter with the set value/counting made
Q	1		BYTE	Set value Low Byte
Q	2		BYTE	Set value High Byte

10.2.23 Type 21 - Serial Interface 3 Bytes

Occupied input process image [(channel x) bits]: (1x) 32
Occupied output process image [(channel x) bits]: (1x) 32

Items that use this mapping type:

0750-0650, 0750-0650#03, 0753-0650#03, 0750-0650/0000-0002, 0750-0650/0000-0003, 0750-0650/0000-0004, 0750-0650/0000-0006, 0750-0650/0000-0007, 0750-0650/0000-0009, 0750-0650/0000-0010, 0750-0650/0000-0011, 0750-0650/0000-0012, 0750-0650/0000-0013, 0750-0650/0003-0000#03, 0753-0650/0003-0000#03, 0750-0651, 0750-0651#03, 0750-0651/0000-0002, 0750-0651/0000-0003, 0750-0651/0000-0004, 0750-0651/0000-0005, 0750-0651/0000-0006, 0750-0653, 0750-0653#03, 0753-0653#03, 0750-0653/0000-0001, 0750-0653/0000-0002, 0750-0653/0000-0005, 0750-0653/0000-0007, 0750-0653/0003-0000#03, 0753-0653/0003-0000#03, 0750-0653/0003-0001#03, 0750-0653/0025-0000#03

Data mapping:

I/Q	Byte	Bit	Data Type	Contents
I	0	0	BOOL	Transmission acknowledgement
I	0	1	BOOL	Reception request
I	0	2	BOOL	Initialization acknowledgement
I	0	3	BOOL	Input buffer is full
I	0	4	BOOL	Number of received characters Bit 0
I	0	5	BOOL	Number of received characters Bit 1
I	0	6	BOOL	Number of received characters Bit 2
I	1		BYTE	Input data Byte 0
I	2		BYTE	Input data Byte 1
I	3		BYTE	Input data Byte 2
Q	0	0	BOOL	Transmission request
Q	0	1	BOOL	Reception acknowledgement
Q	0	2	BOOL	Initialization request
Q	0	4	BOOL	Number of characters Bit 0
Q	0	5	BOOL	Number of characters Bit 1
Q	0	6	BOOL	Number of characters Bit 2
Q	1		BYTE	Output data Byte 0
Q	2		BYTE	Output data Byte 1
Q	3		BYTE	Output data Byte 2

10.2.24 Type 22 - Serial Interface 5 Bytes

Occupied input process image [(channel x) bits]: (1x) 48
Occupied output process image [(channel x) bits]: (1x) 48

Items that use this mapping type:

0750-0650#05, 0750-0650/0000-0001, 0750-0650/0000-0014, 0750-0650/0000-0015, 0750-0650/0000-0016, 0750-0650/0000-0018, 0750-0650/0000-0022, 0750-0650/0000-0025, 0750-0650/0003-0000#05, 0753-0650/0003-0000#05, 0750-0651#05, 0750-0651/0000-0001, 0750-0651/0000-0007, 0750-0653#05, 0753-0653#05, 0750-0653/0000-0006, 0750-0653/0000-0009, 0750-0653/0000-0011, 0750-0653/0000-0018, 0753-0653/0000-0018, 0750-0653/0000-0020, 0750-0653/0000-0021, 0750-0653/0000-0022, 0750-0653/0003-0000#05, 0753-0653/0003-0000#05, 0750-0653/0003-0001#05, 0750-0653/0025-0000#05, 0750-0653/0025-0018

Data mapping:

I/Q	Byte	Bit	Data Type	Contents
I	0	0	BOOL	Transmission acknowledgement
I	0	1	BOOL	Reception request
I	0	2	BOOL	Initialization acknowledgement
I	0	3	BOOL	Input buffer is full
I	0	4	BOOL	Number of received characters Bit 0
I	0	5	BOOL	Number of received characters Bit 1
I	0	6	BOOL	Number of received characters Bit 2
I	1		BYTE	Input data Byte 0
I	2		BYTE	Input data Byte 1
I	3		BYTE	Input data Byte 2
I	4		BYTE	Input data Byte 3
I	5		BYTE	Input data Byte 4
Q	0	0	BOOL	Transmission request
Q	0	1	BOOL	Reception acknowledgement
Q	0	2	BOOL	Initialization request
Q	0	4	BOOL	Number of characters Bit 0
Q	0	5	BOOL	Number of characters Bit 1
Q	0	6	BOOL	Number of characters Bit 2
Q	1		BYTE	Output data Byte 0
Q	2		BYTE	Output data Byte 1
Q	3		BYTE	Output data Byte 2
Q	4		BYTE	Output data Byte 3
Q	5		BYTE	Output data Byte 4

10.2.25 Type 23 - Serial Data Exchange Interface

Occupied input process image [(channel x) bits]: (1x) 32
Occupied output process image [(channel x) bits]: (1x) 32

Items that use this mapping type:

0750-0654, 0750-0654/0000-0001

Data mapping:

I/Q	Byte	Bit	Data Type	Contents
I	0		BYTE	Input data Byte 0
I	1		BYTE	Input data Byte 1
I	2		BYTE	Input data Byte 2
I	3		BYTE	Input data Byte 3
Q	0		BYTE	Output data Byte 0
Q	1		BYTE	Output data Byte 1
Q	2		BYTE	Output data Byte 2
Q	3		BYTE	Output data Byte 3

10.2.26 Type 24 - Up/Down Counter; Switching Output

Occupied input process image [(channel x) bits]: (1x) 48
Occupied output process image [(channel x) bits]: (1x) 48

Items that use this mapping type:

0750-0404/0000-0004

Data mapping (for symmetrical channels, only the first channel is specified):

I/Q	Byte	Bit	Data Type	Contents
I	0	0	BOOL	Status clock
I	0	1	BOOL	Status up/down
I	0	2	BOOL	Status out 1
I	0	3	BOOL	Status out 2
I	0	4	BOOL	Status block counter
I	0	5	BOOL	Status set counter
I	2		WORD	Actual count value Low Word
I	4		WORD	Actual count value High Word
Q	0	0	BOOL	Control out 1 depending from counter
Q	0	1	BOOL	Control out 2 depending from counter
Q	0	2	BOOL	Control out 1
Q	0	3	BOOL	Control out 2
Q	0	4	BOOL	Control block counter
Q	0	5	BOOL	Control set counter
Q	2		WORD	Set count value Low Word
Q	4		WORD	Set count value High Word

10.2.27 Type 25 - Digital input; Diagnostics

Occupied input process image [(channel x) bits]: (2x) 2
Occupied output process image [(channel x) bits]: -

Items that use this mapping type:

0750-0424, 0750-0435

Data mapping:

I/Q	Byte	Bit	Data Type	Contents
I	0	0	BOOL	Digital Input
I	0	1	BOOL	diagnostic

10.2.28 Type 26 - 1-channel digital output

Occupied input process image [(channel x) bits]: (1x) 2
Occupied output process image [(channel x) bits]: (1x) 2

Items that use this mapping type:

0750-0523, 0750-0523/0010-0000

Data mapping:

I/Q	Byte	Bit	Data Type	Contents
I	0	0	BOOL	Diagnostic bit
Q	0	0	BOOL	Digital output

10.2.29 Type 28 - 12 Bytes Generic IN/OUT

Occupied input process image [(channel x) bits]: (1x) 96
Occupied output process image [(channel x) bits]: (1x) 96

Items that use this mapping type:

0750-0644#12, 0750-0655#12, 0753-0655#12, 0750-0657#12, 0750-0658#12

Data mapping:

I/Q	Byte	Bit	Data Type	Contents
I	0	0	BYTE	First Byte of 12
Q	0	0	BYTE	First Byte of 12

10.2.30 Type 29 - 20 Bytes Generic IN/OUT

Occupied input process image [(channel x) bits]: (1x) 160
Occupied output process image [(channel x) bits]: (1x) 160

Items that use this mapping type:

0750-0655#20, 0750-0658#20

Data mapping:

I/Q	Byte	Bit	Data Type	Contents
I	0	0	BYTE	First Byte of 20
Q	0	0	BYTE	First Byte of 20

10.2.31 Type 30 - 24 Bytes Generic IN/OUT

Occupied input process image [(channel x) bits]: (1x) 192
Occupied output process image [(channel x) bits]: (1x) 192

Items that use this mapping type:

0750-0644#24, 0750-0652#24, 0750-0652/0040-0000#24, 0750-0655#24, 0753-0655#24, 0750-0657#24, 0750-0658#24, 0753-0646, 0753-0647

Data mapping:

I/Q	Byte	Bit	Data Type	Contents
I	0	0	BYTE	First Byte of 24
Q	0	0	BYTE	First Byte of 24

10.2.32 Type 31 - 32 Bytes Generic IN/OUT

Occupied input process image [(channel x) bits]: (1x) 256
Occupied output process image [(channel x) bits]: (1x) 256

Items that use this mapping type:

0750-0655#32, 0750-0658#32

Data mapping:

I/Q	Byte	Bit	Data Type	Contents
I	0	0	BYTE	First Byte of 32
Q	0	0	BYTE	First Byte of 32

10.2.33 Type 32 - 40 Bytes Generic IN/OUT

Occupied input process image [(channel x) bits]: (1x) 320
Occupied output process image [(channel x) bits]: (1x) 320

Items that use this mapping type:

0750-0655#40, 0750-0658#40

Data mapping:

I/Q	Byte	Bit	Data Type	Contents
I	0	0	BYTE	First Byte of 40
Q	0	0	BYTE	First Byte of 40

10.2.34 Type 33 - 48 Bytes Generic IN/OUT

Occupied input process image [(channel x) bits]: (1x) 384
Occupied output process image [(channel x) bits]: (1x) 384

Items that use this mapping type:

0750-0644#48, 0750-0652#48, 0750-0652/0040-0000#48, 0750-0655#48, 0753-0655#48, 0750-0658#48

Data mapping (for symmetrical channels, only the first channel is specified):

I/Q	Byte	Bit	Data Type	Contents
I	0	0	BYTE	First Byte of 48
Q	0	0	BYTE	First Byte of 48

10.2.35 Type 34 - Digital input/output

Occupied input process image [(channel x) bits]: (8x) 1
Occupied output process image [(channel x) bits]: (8x) 1

Items that use this mapping type:

0750-1502, 0750-1506

Data mapping:

I/Q	Byte	Bit	Data Type	Contents
I	0	0	BOOL	Digital input
Q	0	0	BOOL	Digital output

10.2.36 Type 36 - DALI/DSI master module

Occupied input process image [(channel x) bits]: (1x) 48
Occupied output process image [(channel x) bits]: (1x) 48

Items that use this mapping type:

0750-0641

Data mapping:

I/Q	Byte	Bit	Data Type	Contents
I	0	0	BOOL	Transmit accepted
I	0	1	BOOL	Receive request
I	0	2	BOOL	Init accepted
I	0	3	BOOL	Actor Error
I	0	4	BOOL	Frame Error
I	0	5	BOOL	Bus Error
I	0	6	BOOL	General Module Error
I	1	0	BYTE	DALI Response
I	2	0	BYTE	DALI Address
I	3	0	BYTE	Message 3
I	4	0	BYTE	Message 2
I	5	0	BYTE	Message 1
Q	0	0	BOOL	Transmit request
Q	0	1	BOOL	Receive accepted
Q	0	2	BOOL	Init request
Q	1	0	BYTE	DALI Command, DSI dimming value
Q	2	0	BYTE	DALI Address
Q	3	0	BYTE	Parameter 2
Q	4	0	BYTE	Parameter 1
Q	5	0	BYTE	Command extension

10.2.37 Type 37 - Radio Receiver EnOcean

Occupied input process image [(channel x) bits]: (1x) 32
Occupied output process image [(channel x) bits]: (1x) 32

Items that use this mapping type:

0750-0642

Data mapping:

I/Q	Byte	Bit	Data Type	Contents
I	0	0	BOOL	Transmission acknowledgement
I	0	1	BOOL	Reception request
I	0	2	BOOL	Initialization acknowledgement
I	0	3	BOOL	Number of received characters Bit 0
I	0	4	BOOL	Number of received characters Bit 1
I	0	5	BOOL	Number of received characters Bit 2
I	0	6	BOOL	Input buffer is full
I	1		BYTE	Input data Byte 0
I	2		BYTE	Input data Byte 1
I	3		BYTE	Input data Byte 2
Q	0	0	BOOL	Transmission request
Q	0	1	BOOL	Reception acknowledgement
Q	0	2	BOOL	Initialization request

10.2.38 Type 38 - MP-Bus Master

Occupied input process image [(channel x) bits]: (1x) 64
Occupied output process image [(channel x) bits]: (1x) 64

Items that use this mapping type:

0750-0643

Data mapping:

I/Q	Byte	Bit	Data Type	Contents
I	0	0	BOOL	Received
I	0	1	BOOL	Transmitted
I	0	2	BOOL	External 24V power supply
I	0	3	BOOL	External master
I	0	4	BOOL	Fragment Id (0=first, 1=second)
I	0	6	BOOL	General module error
I	1	0	BOOL	Data acknowledge confirmation
I	1	1	BOOL	Data request confirmation
I	1	2	BOOL	Function macros active
I	1	3	BOOL	Message code error
I	1	4	BOOL	Message code 0
I	1	5	BOOL	Message code 1
I	1	6	BOOL	Message code 2
I	1	7	BOOL	Message code 3
I	2	0	BYTE	Input data byte 0
I	3	0	BYTE	Input data byte 1
I	4	0	BYTE	Input data byte 2
I	5	0	BYTE	Input data byte 3
I	6	0	BYTE	Input data byte 4
I	7	0	BYTE	Input data byte 5
Q	0	4	BOOL	Fragment Id (0=first, 1=second)
Q	1	0	BOOL	Data request
Q	1	1	BOOL	Data acknowledge
Q	1	4	BOOL	Message code 0
Q	1	5	BOOL	Message code 1
Q	1	6	BOOL	Message code 2
Q	1	7	BOOL	Message code 3
Q	2	0	BYTE	Output data byte 0
Q	3	0	BYTE	Output data byte 1
Q	4	0	BYTE	Output data byte 2
Q	5	0	BYTE	Output data byte 3
Q	6	0	BYTE	Output data byte 4
Q	7	0	BYTE	Output data byte 5

10.2.39 Type 39 - 10 Bytes Generic IN/OUT

Occupied input process image [(channel x) bits]: (1x) 80
Occupied output process image [(channel x) bits]: (1x) 80

Items that use this mapping type:

0750-0657#10

Data mapping:

I/Q	Byte	Bit	Data Type	Contents
I	0	0	BYTE	First Byte of 10
Q	0	0	BYTE	First Byte of 10

10.2.40 Type 40 - 8 Bytes Generic IN/OUT

Occupied input process image [(channel x) bits]: (1x) 64
Occupied output process image [(channel x) bits]: (1x) 64

Items that use this mapping type:

0750-0652#08, 0750-0652/0040-0000#08, 0750-0657#08, 0750-0658#08

Data mapping:

I/Q	Byte	Bit	Data Type	Contents
I	0	0	BYTE	First Byte of 8
Q	0	0	BYTE	First Byte of 8

10.2.41 Type 41 - 6 Bytes Generic IN/OUT

Occupied input process image [(channel x) bits]: (1x) 48
Occupied output process image [(channel x) bits]: (1x) 48

Items that use this mapping type:

0750-0657#06

Data mapping:

I/Q	Byte	Bit	Data Type	Contents
I	0	0	BYTE	First Byte of 6
Q	0	0	BYTE	First Byte of 6

10.2.42 Type 42 - 4 Bytes Generic IN/OUT

Occupied input process image [(channel x) bits]: (1x) 32
Occupied output process image [(channel x) bits]: (1x) 32

Items that use this mapping type:

0750-0657#04

Data mapping:

I/Q	Byte	Bit	Data Type	Contents
I	0	0	BYTE	First Byte of 4
Q	0	0	BYTE	First Byte of 4

10.2.43 Type 43 - Real-time clock Module

Occupied input process image [(channel x) bits]: (1x) 48
Occupied output process image [(channel x) bits]: (1x) 48

Items that use this mapping type:

0750-0640

Data mapping (for symmetrical channels, only the first channel is specified):

I/Q	Byte	Bit	Data Type	Contents
I	0	0	BOOL	Toggle bit response
I	0	1	BOOL	IRQ
I	0	6	BOOL	Error
I	1	0	BYTE	Response Opcode
I	2	0	BYTE	Input data byte 0
I	3	0	BYTE	Input data byte 1
I	4	0	BYTE	Input data byte 2
I	5	0	BYTE	Input data byte 3
Q	0	0	BOOL	Toggle bit request
Q	1	0	BYTE	Request Opcode
Q	2	0	BYTE	Output data byte 0
Q	3	0	BYTE	Output data byte 1
Q	4	0	BYTE	Output data byte 2
Q	5	0	BYTE	Output data byte 3

10.2.44 Type 44 - Analog input signed Int16bit

Occupied input process image [(channel x) bits]: (4x) 16
Occupied output process image [(channel x) bits]: -

Items that use this mapping type:

0750-0460, 0750-0460/0000-0003, 0750-0460/0000-0005, 0750-0461, 0753-0461, 0750-0461/0000-0003, 0750-0461/0000-0004, 0750-0461/0000-0005, 0750-0461/0000-0006, 0753-0461/0000-0006, 0750-0461/0000-0009, 0753-0461/0000-0009, 0750-0461/0000-0010, 0750-0461/0000-0016, 0750-0461/0000-0200, 0750-0461/0000-0201, 0750-0461/0002-0000, 0750-0461/0003-0000, 0753-0461/0003-0000, 0750-0461/0020-0000, 0750-0461/0025-0000, 0750-0462, 0750-0462/0000-0002, 0750-0462/0000-0003, 0750-0462/0000-0006, 0750-0462/0000-0010, 0750-0462/0000-0050, 0750-0463, 0750-0464#02, 0750-0464#04, 0750-0464/0020-0000, 0753-0464/0020-0000, 0750-0464/0040-0000#02, 0750-0464/0040-0000#04, 0750-0469, 0753-0469, 0750-0469/0000-0001, 0750-0469/0000-0002, 0750-0469/0000-0003, 0750-0469/0000-0006, 0750-0469/0000-0007, 0750-0469/0000-0008, 0750-0469/0000-0009, 0750-0469/0000-0012, 0750-0469/0000-0013, 0750-0469/0000-0050, 0750-0469/0000-0051, 0750-0469/0000-0062, 0750-0469/0000-0200, 0750-0469/0000-0202, 0750-0469/0000-0206, 0750-0469/0003-0000, 0753-0469/0003-0000, 0750-0469/0040-0000, 0750-0481/0003-0000, 0750-0487/0003-0000

Data mapping:

I/Q	Byte	Bit	Data Type	Contents
I	0	0	INT	signed Input value

10.2.45 Type 45 - Stepper Controller

Occupied input process image [(channel x) bits]: (1x) 96
Occupied output process image [(channel x) bits]: (1x) 96

Items that use this mapping type:

0750-0670, 0750-0671, 0753-0671, 0750-0672, 0750-0673

Data mapping (for symmetrical channels, only the first channel is specified):

I/Q	Byte	Bit	Data Type	Contents
I	0	0	BYTE	Status Byte
I	2	0	WORD	Actual speed
I	4	0	BYTE	Reserved
I	5	0	BYTE	Reserved
I	6	0	BYTE	Reserved
I	7	0	BYTE	Reserved
I	8	0	BYTE	Reserved
I	9	0	BOOL	STOP 1n
I	9	1	BOOL	REF
I	9	2	BOOL	positive direction
I	9	3	BOOL	negative direction
I	9	4	BOOL	Limit positive direction
I	9	5	BOOL	Limit negative direction
I	9	7	BOOL	Reset
I	10	0	BOOL	ST_ON_TARGET
I	10	1	BOOL	ST_BUSY
I	10	2	BOOL	ST_STANDSTILL
I	10	3	BOOL	ST_VSET
I	10	4	BOOL	ST_DIRECTION
I	10	5	BOOL	ST_REF_OK
I	10	6	BOOL	ST_SETP_M_ACK
I	10	7	BOOL	ST_ERROR
I	11	0	BOOL	ST_READY_ACK
I	11	1	BOOL	ST_STOPn_ACK
I	11	2	BOOL	ST_START_ACK
I	11	3	BOOL	ST_SINGLE_ACK
I	11	4	BOOL	ST_PROGRAM_ACK
I	11	5	BOOL	ST_REF_ACK
I	11	6	BOOL	ST_JOG_ACK
I	11	7	BOOL	ST_MBX_ACK
Q	0	0	BYTE	Control byte
Q	2	0	WORD	speed
Q	4	0	WORD	Acceleration
Q	6	0	BYTE	Reserved
Q	7	0	BYTE	Reserved
Q	8	0	BYTE	Reserved
Q	9	2	BOOL	drive in positive direction
Q	9	3	BOOL	drive in negative direction
Q	9	4	BOOL	Limit positive direction active, only 750-670, 750-671
Q	9	5	BOOL	Limit negative direction active, only 750-670, 750-671
Q	9	6	BOOL	choose setup mode
Q	9	7	BOOL	quit ST_Reset
Q	10	0	BOOL	Speed divider Bit 0

I/Q	Byte	Bit	Data Type	Contents
Q	10	1	BOOL	Speed divider Bit 1
Q	10	2	BOOL	CTL ACC FAC BIT0
Q	10	3	BOOL	CTL ACC FAC BIT1
Q	10	6	BOOL	Save Value
Q	10	7	BOOL	Quit Error
Q	11	0	BOOL	Enable Module
Q	11	1	BOOL	0 = stop drive, inverted signal
Q	11	2	BOOL	0->1 starts drive
Q	11	3	BOOL	single positioning, MBX must be inactive
Q	11	4	BOOL	Program Mode
Q	11	5	BOOL	Reference Mode
Q	11	6	BOOL	Jog Mode
Q	11	7	BOOL	Mailbox Mode

10.2.46 Type 46 - VIB I/O

Occupied input process image [(channel x) bits]: (4x) 24
Occupied output process image [(channel x) bits]: (4x) 24

Items that use this mapping type:

0750-0645

Data mapping (for symmetrical channels, only the first channel is specified):

I/Q	Byte	Bit	Data Type	Contents
I	0		BYTE	Status byte
I	1		BYTE	Input word Low Byte
I	2		BYTE	Input word High Byte
Q	0		BYTE	Control byte
Q	1		BYTE	Output word Low Byte
Q	2		BYTE	Output word High Byte

10.2.47 Type 47 - 3-Phase Power Measurement type 1

Occupied input process image [(channel x) bits]: (3x) 32
Occupied output process image [(channel x) bits]: (3x) 32

Items that use this mapping type:

0750-0493, 0750-0493/0000-0001, 0750-0639

Data mapping:

I/Q	Byte	Bit	Data Type	Contents
I	0	0	BYTE	Status byte
I	2	0	BYTE	Input word Low Byte
I	3	0	BYTE	Input word High Byte
Q	0	0	BYTE	Control byte
Q	2	0	BYTE	Output word Low Byte
Q	3	0	BYTE	Output word High Byte

10.2.48 Type 48 - DC Drive Controller

Occupied input process image [(channel x) bits]: (1x) 48
Occupied output process image [(channel x) bits]: (1x) 48

Items that use this mapping type:

0750-0636, 0750-0636/0000-0700, 0750-0636/0000-0800

Data mapping:

I/Q	Byte	Bit	Data Type	Contents
I	0	0	BOOL	moving negative
I	0	1	BOOL	moving positive
I	0	2	BOOL	On target
I	0	3	BOOL	busy
I	0	4	BOOL	standstill
I	0	5	BOOL	reference ok
I	0	6	BOOL	error, see extended info
I	1	0	BOOL	preset input enabled
I	1	1	BOOL	optimize on (and Z-Input for 750-636 > FW2)
I	1	2	BOOL	extended info on
I	1	3	BOOL	PWM active
I	1	4	BOOL	current control on
I	1	5	BOOL	preset input
I	1	6	BOOL	limit switch negative
I	1	7	BOOL	limit switch positive
I	2	0	BOOL	over temperature warning
I	2	0	WORD	actual position low word
I	2	1	BOOL	over temperature
I	2	2	BOOL	overflow warning
I	2	3	BOOL	24V ok
I	2	4	BOOL	overload
I	2	5	BOOL	motion detection timeout
I	2	6	BOOL	parameter write failed
I	2	7	BOOL	24VL Ok (only 750-636/000-800)
I	3	0	BOOL	24VM Ok (only 750-636/000-800)
I	4	0	WORD	actual position high word
Q	0	0	BOOL	move negative
Q	0	1	BOOL	move positive
Q	0	2	BOOL	positioning
Q	0	3	BOOL	preset
Q	0	4	BOOL	current control on
Q	1	0	BOOL	preset input enable
Q	1	1	BOOL	optimize on
Q	1	2	BOOL	extended info on
Q	1	7	BOOL	error quit
Q	2	0	WORD	target position low word
Q	4	0	WORD	target position high word

10.2.49 Type 49 - 2-channel analog input; 4 … 20 mA HART

Occupied input process image [(channel x) bits]: (1x) 96
Occupied output process image [(channel x) bits]: (1x) 96

Items that use this mapping type:

0750-0482#12, 0750-0482/0000-0300#12, 0750-0484#12

Data mapping:

I/Q	Byte	Bit	Data Type	Contents
I	0	0	BOOL	cable break channel 1
I	0	1	BOOL	short cirquit channel 1
I	0	3	BOOL	cable break channel 2
I	0	4	BOOL	short cirquit channel 2
I	2	0	BYTE	mailbox response, first byte of 6
I	8	0	WORD	input word 1
I	10	0	WORD	input word 2
Q	0	0	BYTE	Control byte
Q	2	0	BYTE	mailbox request, first byte of 6

10.2.50 Type 51 - Incremental encoder interface type 4

Occupied input process image [(channel x) bits]: (1x) 48
Occupied output process image [(channel x) bits]: (1x) 48

Items that use this mapping type:

0750-0631/0000-0004, 0750-0631/0000-0010, 0750-0631/0000-0011

Data mapping:

I/Q	Byte	Bit	Data Type	Contents
I	0	0	BOOL	Latched Data Set
I	0	1	BOOL	External Latch Ack.
I	0	2	BOOL	Counter Set Acknowledge
I	0	3	BOOL	Counter Underflow
I	0	4	BOOL	Counter Overflow
I	0	5	BOOL	External Error
I	1		BYTE	Counter value Low Byte
I	2		BYTE	Counter value High Byte
I	3	0	BOOL	Signal Input Gate
I	3	1	BOOL	Signal Input Latch
I	3	2	BOOL	Signal Input external error
I	3	3	BOOL	Signal Input C,/C
I	3	4	BOOL	Signal Input B,/B
I	3	5	BOOL	Signal Input A,/A
I	4		WORD	Latch value
Q	0	0	BOOL	Release Index Pulse
Q	0	1	BOOL	Release Latch
Q	0	2	BOOL	Counter Set
Q	1		BYTE	Set value Low Byte
Q	2		BYTE	Set value High Byte

10.2.51 Type 52 - Up/down counter 32 bits

Occupied input process image [(channel x) bits]: (1x) 48
Occupied output process image [(channel x) bits]: (1x) 48

Items that use this mapping type:

0750-0633#01, 0750-0633#02

Data mapping:

I/Q	Byte	Bit	Data Type	Contents
I	0	0	BOOL	Status clock
I	0	1	BOOL	Status up/down
I	0	2	BOOL	Status out
I	0	4	BOOL	Status block counter
I	0	5	BOOL	Status set counter
I	0	6	BOOL	General Error Bit
I	2		WORD	Actual count value Low Word
I	4		WORD	Actual count value High Word
Q	0	0	BOOL	Control out depending from counter
Q	0	2	BOOL	Control out
Q	0	4	BOOL	Control block counter
Q	0	5	BOOL	Control set counter
Q	2		WORD	Set value Low Word
Q	4		WORD	Set value High Word

10.2.52 Type 53 - Frequency Counter type 2

Occupied input process image [(channel x) bits]: (1x) 48
Occupied output process image [(channel x) bits]: (1x) 48

Items that use this mapping type:

0750-0633#03

Data mapping:

I/Q	Byte	Bit	Data Type	Contents
I	0	0	BOOL	Ack. Frq. Meas. Range
I	0	1	BOOL	Ack. Frq. Meas. Range
I	0	2	BOOL	Status out
I	0	4	BOOL	Tvd Acknowledge
I	0	5	BOOL	Status Gate input
I	0	6	BOOL	General Error Bit
I	2		WORD	Frequency Low Word
I	4		WORD	Frequency High Word
Q	0	0	BOOL	Frequency measuring range
Q	0	1	BOOL	Frequency measuring range
Q	0	2	BOOL	Control out
Q	0	4	BOOL	Tvd Request
Q	2		WORD	Watchdog Time

10.2.53 Type 54 - Peak Time Counter type 2

Occupied input process image [(channel x) bits]: (1x) 48
Occupied output process image [(channel x) bits]: (1x) 48

Items that use this mapping type:

0750-0633#04

Data mapping:

I/Q	Byte	Bit	Data Type	Contents
I	0	0	BOOL	Toggle Bit
I	0	1	BOOL	Status up/down
I	0	2	BOOL	Status out
I	0	5	BOOL	Confirmation start counting
I	0	6	BOOL	General Error Bit
I	2		WORD	Actual count value Low Word
I	4		WORD	Actual count value High Word
Q	0	2	BOOL	Control Out
Q	0	5	BOOL	Control bit start count pulse acquisition

10.2.54 Type 55 - LON-FTT Interface

Occupied input process image [(channel x) bits]: (1x) 192
Occupied output process image [(channel x) bits]: (1x) 192

Items that use this mapping type:

0753-0648

Data mapping:

I/Q	Byte	Bit	Data Type	Contents
I	0	0	BYTE	First Byte of 24
Q	0	0	BYTE	First Byte of 24

10.2.55 Type 56 - 16 Bytes Generic IN/OUT

Occupied input process image [(channel x) bits]: (1x) 128
Occupied output process image [(channel x) bits]: (1x) 128

Items that use this mapping type:

0750-0657#16, 0750-0658#16

Data mapping:

I/Q	Byte	Bit	Data Type	Contents
I	0	0	BYTE	First Byte of 16
Q	0	0	BYTE	First Byte of 16

10.2.56 Type 57 - DALI Multi-Master

Occupied input process image [(channel x) bits]: (1x) 192
Occupied output process image [(channel x) bits]: (1x) 192

Items that use this mapping type:

0753-0647#01

Data mapping:

I/Q	Byte	Bit	Data Type	Contents
I	0	0	BOOL	One/Two-Key-Mode
I	0	2	BOOL	Broadcast: State on/off
I	1	0	BYTE	reserved
I	2	0	BOOL	Address 0 On/Off state
I	2	1	BOOL	Address 0 lamp failure
I	2	2	BOOL	Address 1 On/Off state
I	2	3	BOOL	Address 1 lamp failure
I	2	4	BOOL	Address 2 On/Off state
I	2	5	BOOL	Address 2 lamp failure
I	2	6	BOOL	Address 3 On/Off state
I	2	7	BOOL	Address 3 lamp failure
I	3	0	BOOL	Address 4 On/Off state
I	3	1	BOOL	Address 4 lamp failure
I	3	2	BOOL	Address 5 On/Off state
I	3	3	BOOL	Address 5 lamp failure
I	3	4	BOOL	Address 6 On/Off state
I	3	5	BOOL	Address 6 lamp failure
I	3	6	BOOL	Address 7 On/Off state
I	3	7	BOOL	Address 7 lamp failure
I	4	0	BOOL	Address 8 On/Off state
I	4	1	BOOL	Address 8 lamp failure
I	4	2	BOOL	Address 9 On/Off state
I	4	3	BOOL	Address 9 lamp failure
I	4	4	BOOL	Address 10 On/Off state
I	4	5	BOOL	Address 10 lamp failure
I	4	6	BOOL	Address 11 On/Off state
I	4	7	BOOL	Address 11 lamp failure
I	5	0	BOOL	Address 12 On/Off state
I	5	1	BOOL	Address 12 lamp failure
I	5	2	BOOL	Address 13 On/Off state
I	5	3	BOOL	Address 13 lamp failure
I	5	4	BOOL	Address 14 On/Off state
I	5	5	BOOL	Address 14 lamp failure
I	5	6	BOOL	Address 15 On/Off state
I	5	7	BOOL	Address 15 lamp failure
I	6	0	BOOL	Address 16 On/Off state
I	6	1	BOOL	Address 16 lamp failure
I	6	2	BOOL	Adresse 17 On/Off state
I	6	3	BOOL	Address 17 lamp failure
I	6	4	BOOL	Address 18 On/Off state
I	6	5	BOOL	Address 18 lamp failure
I	6	6	BOOL	Address 19 On/Off state
I	6	7	BOOL	Address 19 lamp failure
I	7	0	BOOL	Address 20 On/Off state
I	7	1	BOOL	Adresse 20 lamp failure

I/Q	Byte	Bit	Data Type	Contents
I	7	2	BOOL	Address 21 On/Off state
I	7	3	BOOL	Address 21 lamp failure
I	7	4	BOOL	Address 22 On/Off state
I	7	5	BOOL	Address 22 lamp failure
I	7	6	BOOL	Address 23 On/Off state
I	7	7	BOOL	Address 23 lamp failure
I	8	0	BOOL	Adresse 24 On/Off state
I	8	1	BOOL	Address 24 lamp failure
I	8	2	BOOL	Address 25 On/Off state
I	8	3	BOOL	Address 25 lamp failure
I	8	4	BOOL	Address 26 On/Off state
I	8	5	BOOL	Address 26 lamp failure
I	8	6	BOOL	Address 27 On/Off state
I	8	7	BOOL	Adresse 27 lamp failure
I	9	0	BOOL	Address 28 On/Off state
I	9	1	BOOL	Address 28 lamp failure
I	9	2	BOOL	Address 29 On/Off state
I	9	3	BOOL	Address 29 lamp failure
I	9	4	BOOL	Address 30 On/Off state
I	9	5	BOOL	Address 30 lamp failure
I	9	6	BOOL	Adresse 31 On/Off state
I	9	7	BOOL	Address 31 lamp failure
I	10	0	BOOL	Address 32 On/Off state
I	10	1	BOOL	Address 32 lamp failure
I	10	2	BOOL	Address 33 On/Off state
I	10	3	BOOL	Address 33 lamp failure
I	10	4	BOOL	Address 34 On/Off state
I	10	5	BOOL	Adresse 34 lamp failure
I	10	6	BOOL	Address 35 On/Off state
I	10	7	BOOL	Address 35 lamp failure
I	11	0	BOOL	Address 36 On/Off state
I	11	1	BOOL	Address 36 lamp failure
I	11	2	BOOL	Address 37 On/Off state
I	11	3	BOOL	Address 37 lamp failure
I	11	4	BOOL	Adresse 38 On/Off state
I	11	5	BOOL	Address 38 lamp failure
I	11	6	BOOL	Address 39 On/Off state
I	11	7	BOOL	Address 39 lamp failure
I	12	0	BOOL	Address 40 On/Off state
I	12	1	BOOL	Address 40 lamp failure
I	12	2	BOOL	Address 41 On/Off state
I	12	3	BOOL	Adresse 41 lamp failure
I	12	4	BOOL	Address 42 On/Off state
I	12	5	BOOL	Address 42 lamp failure
I	12	6	BOOL	Address 43 On/Off state
I	12	7	BOOL	Address 43 lamp failure
I	13	0	BOOL	Address 44 On/Off state
I	13	1	BOOL	Address 44 lamp failure
I	13	2	BOOL	Adresse 45 On/Off state
I	13	3	BOOL	Address 45 lamp failure
I	13	4	BOOL	Address 46 On/Off state
I	13	5	BOOL	Address 46 lamp failure
I	13	6	BOOL	Address 47 On/Off state
I	13	7	BOOL	Address 47 lamp failure
I	14	0	BOOL	Address 48 On/Off state
I	14	1	BOOL	Adresse 48 lamp failure
I	14	2	BOOL	Address 49 On/Off state

I/Q	Byte	Bit	Data Type	Contents
I	14	3	BOOL	Address 49 lamp failure
I	14	4	BOOL	Address 50 On/Off state
I	14	5	BOOL	Address 50 lamp failure
I	14	6	BOOL	Address 51 On/Off state
I	14	7	BOOL	Address 51 lamp failure
I	15	0	BOOL	Adresse 52 On/Off state
I	15	1	BOOL	Address 52 lamp failure
I	15	2	BOOL	Address 53 On/Off state
I	15	3	BOOL	Address 53 lamp failure
I	15	4	BOOL	Address 54 On/Off state
I	15	5	BOOL	Address 54 lamp failure
I	15	6	BOOL	Address 55 On/Off state
I	15	7	BOOL	Adresse 55 lamp failure
I	16	0	BOOL	Address 56 On/Off state
I	16	1	BOOL	Address 56 lamp failure
I	16	2	BOOL	Address 57 On/Off state
I	16	3	BOOL	Address 57 lamp failure
I	16	4	BOOL	Address 58 On/Off state
I	16	5	BOOL	Address 58 lamp failure
I	16	6	BOOL	Adresse 59 On/Off state
I	16	7	BOOL	Address 59 lamp failure
I	17	0	BOOL	Address 60 On/Off state
I	17	1	BOOL	Address 60 lamp failure
I	17	2	BOOL	Address 61 On/Off state
I	17	3	BOOL	Address 61 lamp failure
I	17	4	BOOL	Address 62 On/Off state
I	17	5	BOOL	Adresse 62 lamp failure
I	17	6	BOOL	Address 63 On/Off state
I	17	7	BOOL	Address 63 lamp failure
I	18	0	BOOL	Group 0 On/Off state
I	18	2	BOOL	Group 1 On/Off state
I	18	4	BOOL	Group 2 On/Off state
I	18	6	BOOL	Group 3 On/Off state
I	19	0	BOOL	Group 4 On/Off state
I	19	2	BOOL	Group 5 On/Off state
I	19	4	BOOL	Group 6 On/Off state
I	19	6	BOOL	Group 7 On/Off state
I	20	0	BOOL	Group 8 On/Off state
I	20	2	BOOL	Group 9 On/Off state
I	20	4	BOOL	Group 10 On/Off state
I	20	6	BOOL	Group 11 On/Off state
I	21	0	BOOL	Group 12 On/Off state
I	21	2	BOOL	Group 13 On/Off state
I	21	4	BOOL	Group 14 On/Off state
I	21	6	BOOL	Group 15 On/Off state
Q	0	0	BOOL	Broadcast on
Q	0	1	BOOL	Broadcast off
Q	0	2	BOOL	Broadcast On / Off / Dim Up
Q	0	3	BOOL	Broadcast On / Off / Dim Down
Q	1	0	BYTE	reserved
Q	2	0	BOOL	Address 0 On/Off /Dim Up
Q	2	1	BOOL	Address 0 On/Off / Dim Down
Q	2	2	BOOL	Address 1 On/Off /Dim Up
Q	2	3	BOOL	Address 1 On/Off / Dim Down
Q	2	4	BOOL	Address 2 On/Off /Dim Up
Q	2	5	BOOL	Address 2 On/Off / Dim Down
Q	2	6	BOOL	Address 3 On/Off /Dim Up

I/Q	Byte	Bit	Data Type	Contents
Q	2	7	BOOL	Address 3 On/Off / Dim Down
Q	3	0	BOOL	Address 4 On/Off /Dim Up
Q	3	1	BOOL	Address 4 On/Off / Dim Down
Q	3	2	BOOL	Address 5 On/Off /Dim Up
Q	3	3	BOOL	Address 5 On/Off / Dim Down
Q	3	4	BOOL	Address 6 On/Off /Dim Up
Q	3	5	BOOL	Address 6 On/Off / Dim Down
Q	3	6	BOOL	Address 7 On/Off /Dim Up
Q	3	7	BOOL	Address 7 On/Off / Dim Down
Q	4	0	BOOL	Address 8 On/Off /Dim Up
Q	4	1	BOOL	Address 8 On/Off / Dim Down
Q	4	2	BOOL	Address 9 On/Off /Dim Up
Q	4	3	BOOL	Address 9 On/Off / Dim Down
Q	4	4	BOOL	Address 10 On/Off /Dim Up
Q	4	5	BOOL	Address 10 On/Off / Dim Down
Q	4	6	BOOL	Address 11 On/Off /Dim Up
Q	4	7	BOOL	Address 11 On/Off / Dim Down
Q	5	0	BOOL	Address 12 On/Off /Dim Up
Q	5	1	BOOL	Address 12 On/Off / Dim Down
Q	5	2	BOOL	Address 13 On/Off /Dim Up
Q	5	3	BOOL	Address 13 On/Off / Dim Down
Q	5	4	BOOL	Address 14 On/Off /Dim Up
Q	5	5	BOOL	Address 14 On/Off / Dim Down
Q	5	6	BOOL	Address 15 On/Off /Dim Up
Q	5	7	BOOL	Address 15 On/Off / Dim Down
Q	6	0	BOOL	Address 16 On/Off /Dim Up
Q	6	1	BOOL	Address 16 On/Off / Dim Down
Q	6	2	BOOL	Address 17 On/Off /Dim Up
Q	6	3	BOOL	Address 17 On/Off / Dim Down
Q	6	4	BOOL	Address 18 On/Off /Dim Up
Q	6	5	BOOL	Address 18 On/Off / Dim Down
Q	6	6	BOOL	Address 19 On/Off /Dim Up
Q	6	7	BOOL	Address 19 On/Off / Dim Down
Q	7	0	BOOL	Address 20 On/Off /Dim Up
Q	7	1	BOOL	Address 20 On/Off / Dim Down
Q	7	2	BOOL	Address 21 On/Off /Dim Up
Q	7	3	BOOL	Address 21 On/Off / Dim Down
Q	7	4	BOOL	Address 22 On/Off /Dim Up
Q	7	5	BOOL	Address 22 On/Off / Dim Down
Q	7	6	BOOL	Address 23 On/Off /Dim Up
Q	7	7	BOOL	Address 23 On/Off / Dim Down
Q	8	0	BOOL	Address 24 On/Off /Dim Up
Q	8	1	BOOL	Address 24 On/Off / Dim Down
Q	8	2	BOOL	Address 25 On/Off /Dim Up
Q	8	3	BOOL	Address 25 On/Off / Dim Down
Q	8	4	BOOL	Address 26 On/Off /Dim Up
Q	8	5	BOOL	Address 26 On/Off / Dim Down
Q	8	6	BOOL	Address 27 On/Off /Dim Up
Q	8	7	BOOL	Address 27 On/Off / Dim Down
Q	9	0	BOOL	Address 28 On/Off /Dim Up
Q	9	1	BOOL	Address 28 On/Off / Dim Down
Q	9	2	BOOL	Address 29 On/Off /Dim Up
Q	9	3	BOOL	Address 29 On/Off / Dim Down
Q	9	4	BOOL	Address 30 On/Off /Dim Up
Q	9	5	BOOL	Address 30 On/Off / Dim Down
Q	9	6	BOOL	Address 31 On/Off /Dim Up
Q	9	7	BOOL	Address 31 On/Off / Dim Down

I/Q	Byte	Bit	Data Type	Contents
Q	10	0	BOOL	Address 32 On/Off /Dim Up
Q	10	1	BOOL	Address 32 On/Off / Dim Down
Q	10	2	BOOL	Address 33 On/Off /Dim Up
Q	10	3	BOOL	Address 33 On/Off / Dim Down
Q	10	4	BOOL	Address 34 On/Off /Dim Up
Q	10	5	BOOL	Address 34 On/Off / Dim Down
Q	10	6	BOOL	Address 35 On/Off /Dim Up
Q	10	7	BOOL	Address 35 On/Off / Dim Down
Q	11	0	BOOL	Address 36 On/Off /Dim Up
Q	11	1	BOOL	Address 36 On/Off / Dim Down
Q	11	2	BOOL	Address 37 On/Off /Dim Up
Q	11	3	BOOL	Address 37 On/Off / Dim Down
Q	11	4	BOOL	Address 38 On/Off /Dim Up
Q	11	5	BOOL	Address 38 On/Off / Dim Down
Q	11	6	BOOL	Address 39 On/Off /Dim Up
Q	11	7	BOOL	Address 39 On/Off / Dim Down
Q	12	0	BOOL	Address 40 On/Off /Dim Up
Q	12	1	BOOL	Address 40 On/Off / Dim Down
Q	12	2	BOOL	Address 41 On/Off /Dim Up
Q	12	3	BOOL	Address 41 On/Off / Dim Down
Q	12	4	BOOL	Address 42 On/Off /Dim Up
Q	12	5	BOOL	Address 42 On/Off / Dim Down
Q	12	6	BOOL	Address 43 On/Off /Dim Up
Q	12	7	BOOL	Address 43 On/Off / Dim Down
Q	13	0	BOOL	Address 44 On/Off /Dim Up
Q	13	1	BOOL	Address 44 On/Off / Dim Down
Q	13	2	BOOL	Address 45 On/Off /Dim Up
Q	13	3	BOOL	Address 45 On/Off / Dim Down
Q	13	4	BOOL	Address 46 On/Off /Dim Up
Q	13	5	BOOL	Address 46 On/Off / Dim Down
Q	13	6	BOOL	Address 47 On/Off /Dim Up
Q	13	7	BOOL	Address 47 On/Off / Dim Down
Q	14	0	BOOL	Address 48 On/Off /Dim Up
Q	14	1	BOOL	Address 48 On/Off / Dim Down
Q	14	2	BOOL	Address 49 On/Off /Dim Up
Q	14	3	BOOL	Address 49 On/Off / Dim Down
Q	14	4	BOOL	Address 50 On/Off /Dim Up
Q	14	5	BOOL	Address 50 On/Off / Dim Down
Q	14	6	BOOL	Address 51 On/Off /Dim Up
Q	14	7	BOOL	Address 51 On/Off / Dim Down
Q	15	0	BOOL	Address 52 On/Off /Dim Up
Q	15	1	BOOL	Address 52 On/Off / Dim Down
Q	15	2	BOOL	Address 53 On/Off /Dim Up
Q	15	3	BOOL	Address 53 On/Off / Dim Down
Q	15	4	BOOL	Address 54 On/Off /Dim Up
Q	15	5	BOOL	Address 54 On/Off / Dim Down
Q	15	6	BOOL	Address 55 On/Off /Dim Up
Q	15	7	BOOL	Address 55 On/Off / Dim Down
Q	16	0	BOOL	Address 56 On/Off /Dim Up
Q	16	1	BOOL	Address 56 On/Off / Dim Down
Q	16	2	BOOL	Address 57 On/Off /Dim Up
Q	16	3	BOOL	Address 57 On/Off / Dim Down
Q	16	4	BOOL	Address 58 On/Off /Dim Up
Q	16	5	BOOL	Address 58 On/Off / Dim Down
Q	16	6	BOOL	Address 59 On/Off /Dim Up
Q	16	7	BOOL	Address 59 On/Off / Dim Down
Q	17	0	BOOL	Address 60 On/Off /Dim Up

I/Q	Byte	Bit	Data Type	Contents
Q	17	1	BOOL	Address 60 On/Off / Dim Down
Q	17	2	BOOL	Address 61 On/Off /Dim Up
Q	17	3	BOOL	Address 61 On/Off / Dim Down
Q	17	4	BOOL	Address 62 On/Off /Dim Up
Q	17	5	BOOL	Address 62 On/Off / Dim Down
Q	17	6	BOOL	Address 63 On/Off /Dim Up
Q	17	7	BOOL	Address 63 On/Off / Dim Down
Q	18	0	BOOL	Group 0 On / Off / Dim Up
Q	18	1	BOOL	Group 0 On / Off / Dim Down
Q	18	2	BOOL	Group 1 On / Off / Dim Up
Q	18	3	BOOL	Group 1 On / Off / Dim Down
Q	18	4	BOOL	Group 2 On / Off / Dim Up
Q	18	5	BOOL	Group 2 On / Off / Dim Down
Q	18	6	BOOL	Group 3 On / Off / Dim Up
Q	18	7	BOOL	Group 3 On / Off / Dim Down
Q	19	0	BOOL	Group 4 On / Off / Dim Up
Q	19	1	BOOL	Group 4 On / Off / Dim Down
Q	19	2	BOOL	Group 5 On / Off / Dim Up
Q	19	3	BOOL	Group 5 On / Off / Dim Down
Q	19	4	BOOL	Group 6 On / Off / Dim Up
Q	19	5	BOOL	Group 6 On / Off / Dim Down
Q	19	6	BOOL	Group 7 On / Off / Dim Up
Q	19	7	BOOL	Group 7 On / Off / Dim Down
Q	20	0	BOOL	Group 8 On / Off / Dim Up
Q	20	1	BOOL	Group 8 On / Off / Dim Down
Q	20	2	BOOL	Group 9 On / Off / Dim Up
Q	20	3	BOOL	Group 9 On / Off / Dim Down
Q	20	4	BOOL	Group 10 On / Off / Dim Up
Q	20	5	BOOL	Group 10 On / Off / Dim Down
Q	20	6	BOOL	Group 11 On / Off / Dim Up
Q	20	7	BOOL	Group 11 On / Off / Dim Down
Q	21	0	BOOL	Group 12 On / Off / Dim Up
Q	21	1	BOOL	Group 12 On / Off / Dim Down
Q	21	2	BOOL	Group 13 On / Off / Dim Up
Q	21	3	BOOL	Group 13 On / Off / Dim Down
Q	21	4	BOOL	Group 14 On / Off / Dim Up
Q	21	5	BOOL	Group 14 On / Off / Dim Down
Q	21	6	BOOL	Group 15 On / Off / Dim Up
Q	21	7	BOOL	Group 15 On / Off / Dim Down
Q	22	0	BOOL	scene 0
Q	22	1	BOOL	scene 1
Q	22	2	BOOL	scene 2
Q	22	3	BOOL	scene 3
Q	22	4	BOOL	scene 4
Q	22	5	BOOL	scene 5
Q	22	6	BOOL	scene 6
Q	22	7	BOOL	scene 7
Q	23	0	BOOL	scene 8
Q	23	1	BOOL	scene 9
Q	23	2	BOOL	scene 10
Q	23	3	BOOL	scene 11
Q	23	4	BOOL	scene 12
Q	23	5	BOOL	scene 13
Q	23	6	BOOL	scene 14
Q	23	7	BOOL	scene 15

10.2.57 Type 58 - 3-Phase Power Measurement type 2

Occupied input process image [(channel x) bits]: (1x) 192
Occupied output process image [(channel x) bits]: (1x) 192

Items that use this mapping type:

0750-0494, 0750-0494/0000-0001, 0750-0494/0025-0000, 0750-0494/0025-0001, 0750-0495, 0750-0495/0000-0001, 0750-0495/0000-0002, 0750-0495/0040-0000, 0750-0495/0040-0001, 0750-0495/0040-0002

Data mapping:

I/Q	Byte	Bit	Data Type	Contents
I	0	0	WORD	Status Word
I	2	0	WORD	Status Word 1
I	4	0	WORD	Status Word 2
I	6	0	WORD	Status Word 3
I	8	0	DWORD	process value 1
I	12	0	DWORD	process value 2
I	16	0	DWORD	process value 3
I	20	0	DWORD	process value 4
Q	0	0	WORD	Control Word
Q	2	0	WORD	Control Word 1
Q	4	0	WORD	Control Word 2
Q	6	0	WORD	Control Word 3

10.2.58 Type 59 - 8-channel digital input

Occupied input process image [(channel x) bits]: (1x) 16
Occupied output process image [(channel x) bits]: (1x) 16

Items that use this mapping type:

0750-0439, 0750-1425

Data mapping:

I/Q	Byte	Bit	Data Type	Contents
I	0	0	BOOL	Ch_1 Digital Input
I	0	1	BOOL	Ch_2 Digital Input
I	0	2	BOOL	Ch_3 Digital Input
I	0	3	BOOL	Ch_4 Digital Input
I	0	4	BOOL	Ch_5 Digital Input
I	0	5	BOOL	Ch_6 Digital Input
I	0	6	BOOL	Ch_7 Digital Input
I	0	7	BOOL	Ch_8 Digital Input
I	1	0	BOOL	Ch_1 Diagnose
I	1	1	BOOL	Ch_2 Diagnose
I	1	2	BOOL	Ch_3 Diagnose
I	1	3	BOOL	Ch_4 Diagnose
I	1	4	BOOL	Ch_5 Diagnose
I	1	5	BOOL	Ch_6 Diagnose
I	1	6	BOOL	Ch_7 Diagnose
I	1	7	BOOL	Ch_8 Diagnose
Q	1	0	BOOL	Ch_1 Control Diag
Q	1	1	BOOL	Ch_2 Control Diag
Q	1	2	BOOL	Ch_3 Control Diag
Q	1	3	BOOL	Ch_4 Control Diag
Q	1	4	BOOL	Ch_5 Control Diag
Q	1	5	BOOL	Ch_6 Control Diag
Q	1	6	BOOL	Ch_7 Control Diag
Q	1	7	BOOL	Ch_8 Control Diag

10.2.59 Type 60 - Proportional Valve Module 6 Bytes

Occupied input process image [(channel x) bits]: (1x) 48
Occupied output process image [(channel x) bits]: (1x) 48

Items that use this mapping type:

0750-0632#6, 0750-0632/0000-0100#6

Data mapping:

I/Q	Byte	Bit	Data Type	Contents
I	0	0	BYTE	KBUS_ST
I	1	0	BYTE	MBX_ST
I	2	0	BYTE	MBX_Input_Data_1
I	3	0	BOOL	V1_READY
I	3	1	BOOL	V1_ON_TARGET
I	3	3	BOOL	V1_DI2
I	3	4	BOOL	V1_DI1
I	3	5	BOOL	V1_DITHER_ST
I	3	6	BOOL	V1_JOGNEG_ACK
I	3	7	BOOL	V1_JOGPOS_ACK
I	4	0	INT	V1_COIL_CURRENT_IN
Q	0	0	BYTE	KBUS_CTRL
Q	1	0	BYTE	MBX_CTRL
Q	2	0	BYTE	MBX_Output_Data_1
Q	3	0	BOOL	V1_PWR_EN
Q	3	1	BOOL	V1_SPL_EN
Q	3	3	BOOL	V1_RSEL_0
Q	3	4	BOOL	V1_RSEL_1
Q	3	5	BOOL	V1_DITHER_CTRL
Q	3	6	BOOL	V1_JOGNEG
Q	3	7	BOOL	V1_JOGPOS
Q	4	0	INT	V1_COIL_CURRENT_OUT

10.2.60 Type 61 - Proportional Valve Module 12 Bytes

Occupied input process image [(channel x) bits]: (1x) 96
Occupied output process image [(channel x) bits]: (1x) 96

Items that use this mapping type:

0750-0632#12, 0750-0632/0000-0100#12

Data mapping (for symmetrical channels, only the first channel is specified):

I/Q	Byte	Bit	Data Type	Contents
I	0	0	BYTE	KBUS_ST
I	1	0	BYTE	MBX_ST
I	2	0	BYTE	MBX_Input_Data_1
I	3	0	BYTE	MBX_Input_Data_2
I	4	0	BYTE	MBX_Input_Data_3
I	5	0	BYTE	MBX_Input_Data_4
I	6	0	BOOL	V1_READY
I	6	1	BOOL	V1_ON_TARGET
I	6	3	BOOL	V1_DI2
I	6	4	BOOL	V1_DI1
I	6	5	BOOL	V1_DITHER_ST
I	6	6	BOOL	V1_JOGNEG_ACK
I	6	7	BOOL	V1_JOGPOS_ACK
I	7	0	BOOL	V2_READY
I	7	1	BOOL	V2_ON_TARGET
I	7	5	BOOL	V2_DITHER_ST
I	7	6	BOOL	V2_JOGNEG_ACK
I	7	7	BOOL	V2_JOGPOS_ACK
I	8	0	INT	V1_COIL_CURRENT_IN
I	10	0	INT	V2_COIL_CURRENT_IN
Q	0	0	BYTE	KBUS_CTRL
Q	1	0	BYTE	MBX_CTRL
Q	2	0	BYTE	MBX_Output_Data_1
Q	3	0	BYTE	MBX_Output_Data_2
Q	4	0	BYTE	MBX_Output_Data_3
Q	5	0	BYTE	MBX_Output_Data_4
Q	6	0	BOOL	V1_PWR_EN
Q	6	1	BOOL	V1_SPL_EN
Q	6	3	BOOL	V1_RSEL_0
Q	6	4	BOOL	V1_RSEL_1
Q	6	5	BOOL	V1_DITHER_CTRL
Q	6	6	BOOL	V1_JOGNEG
Q	6	7	BOOL	V1_JOGPOS
Q	7	0	BOOL	V2_PWR_EN
Q	7	1	BOOL	V2_SPL_EN
Q	7	3	BOOL	V2_RSEL_0
Q	7	4	BOOL	V2_RSEL_1
Q	7	5	BOOL	V2_DITHER_CTRL
Q	7	6	BOOL	V2_JOGNEG
Q	7	7	BOOL	V2_JOGPOS
Q	8	0	INT	V1_COIL_CURRENT_OUT
Q	10	0	INT	V2_COIL_CURRENT_OUT

10.2.61 Type 62 - 4-channel analog input; Resistance measurement

Occupied input process image [(channel x) bits]: (4x) 16
Occupied output process image [(channel x) bits]: -

Items that use this mapping type:

0750-0450

Data mapping (for symmetrical channels, only the first channel is specified):

I/Q	Byte	Bit	Data Type	Contents
I	0	0	INT	signed Input value

10.2.62 Type 63 - 8-channel analog input

Occupied input process image [(channel x) bits]: (8x) 16
Occupied output process image [(channel x) bits]: -

Items that use this mapping type:

0750-0451, 0750-0458, 0750-0496, 0750-0497

Data mapping (for symmetrical channels, only the first channel is specified):

I/Q	Byte	Bit	Data Type	Contents
I	0	0	INT	signed Input value

10.2.63 Type 64 - 8-channel analog output

Occupied input process image [(channel x) bits]: -
Occupied output process image [(channel x) bits]: (8x) 16

Items that use this mapping type:

0750-0597

Data mapping (for symmetrical channels, only the first channel is specified):

I/Q	Byte	Bit	Data Type	Contents
Q	0	0	INT	signed Output value

10.2.64 Type 65 - 4-channel analog input; Diagnostics

Occupied input process image [(channel x) bits]: (4x) 16
Occupied output process image [(channel x) bits]: -

Items that use this mapping type:

0750-0486

PI	Byte	Bit	Type	Contents
I	0	0	INT	signed Input value

11 Service

11.1 Replacing 750-310 by 750-325

The 750-310 CC-Link Fieldbus Coupler with CC-Link Version V1.1 in existing applications can be replaced by a 750-325 CC-Link Fieldbus Coupler with no software customization.
The points listed below should be taken into account.

1. Please note that the 750-325 with the dimensions 61.5 x 71.9 x 100 mm is somewhat larger than the 750-310 with the dimensions 51 x 65 x 100 mm.

2. Replace the D-sub connector for the fieldbus connection by a 231-2304 type pluggable connector. It is included in the scope of delivery.

3. Set the rotary switch to the previous station address of the 750-310 being used. To do this, turn the switch x1 for the unit position and the switch x10 for the tens digit of the address.

4. Determine the number of occupied stations set and the baud rate of the 750-310 to be used.

Information

Additional information about parameters!
Details on how to determine the parameters of the 750-310 fieldbus coupler using the corresponding setting are available in the associated documentation for the 750-310 CC-Link Fieldbus Coupler.
The manual for the 750-310 CC-Link Fieldbus coupler is available on the website at: www.wago.com.

5. Use the DIP switch to set the parameters to the respective values based on the configuration in your master.

Table 66:750-325 to replace 750-310 (V1.1 Use) – DIP Switch Settings

Pin	Value	Setting	
8	0	Operating mode	CC-Link V 1.1
6/7	0/0	Extended cyclic setting	Irrelevant
4/5	x/x	Number of occupied station addresses	Dependent on the presetting of the 750-310 fieldbus coupler to be used.
1/2/3	x/x/x	Baud rate setting	Dependent on the presetting of the 750-310 fieldbus coupler to be used.

11.2 Disposal

11.2.1 Electrical and Electronic Equipment

Electrical and electronic equipment may not be disposed of with household waste. This also applies to products without this symbol.

Electrical and electronic equipment contain materials and substances that can be harmful to the environment and health. Electrical and electronic equipment must be disposed of properly after use.
WEEE 2012/19/EU applies throughout Europe. Directives and laws may vary nationally.

Environmentally friendly disposal benefits health and protects the environment from harmful substances in electrical and electronic equipment.

- Observe national and local regulations for the disposal of electrical and electronic equipment.
- Clear any data stored on the electrical and electronic equipment.
- Remove any added battery or memory card in the electrical and electronic equipment.
- Have the electrical and electronic equipment sent to your local collection point.

Improper disposal of electrical and electronic equipment can be harmful to the environment and human health.

11.2.2 Packaging

Packaging contains materials that can be reused.
PPWD 94/62/EU and 2004/12/EU packaging guidelines apply throughout Europe. Directives and laws may vary nationally.

Environmentally friendly disposal of the packaging protects the environment and allows sustainable and efficient use of resources.

- Observe national and local regulations for the disposal of packaging.

- Dispose of packaging of all types that allows a high level of recovery, reuse and recycling.

Improper disposal of packaging can be harmful to the environment and wastes valuable resources.

12 Use in Hazardous Environments

The **WAGO I/O SYSTEM 750** (electrical equipment) is designed for use in Zone 2 hazardous areas and shall be used in accordance with the marking and installation regulations.

The following sections include both the general identification of components (devices) and the installation regulations to be observed. The individual subsections of the “Installation Regulations” section must be taken into account if the I/O module has the required approval or is subject to the range of application of the ATEX directive.

12.1 Marking Configuration Examples

12.1.1 Marking for Europe According to ATEX and IECEx

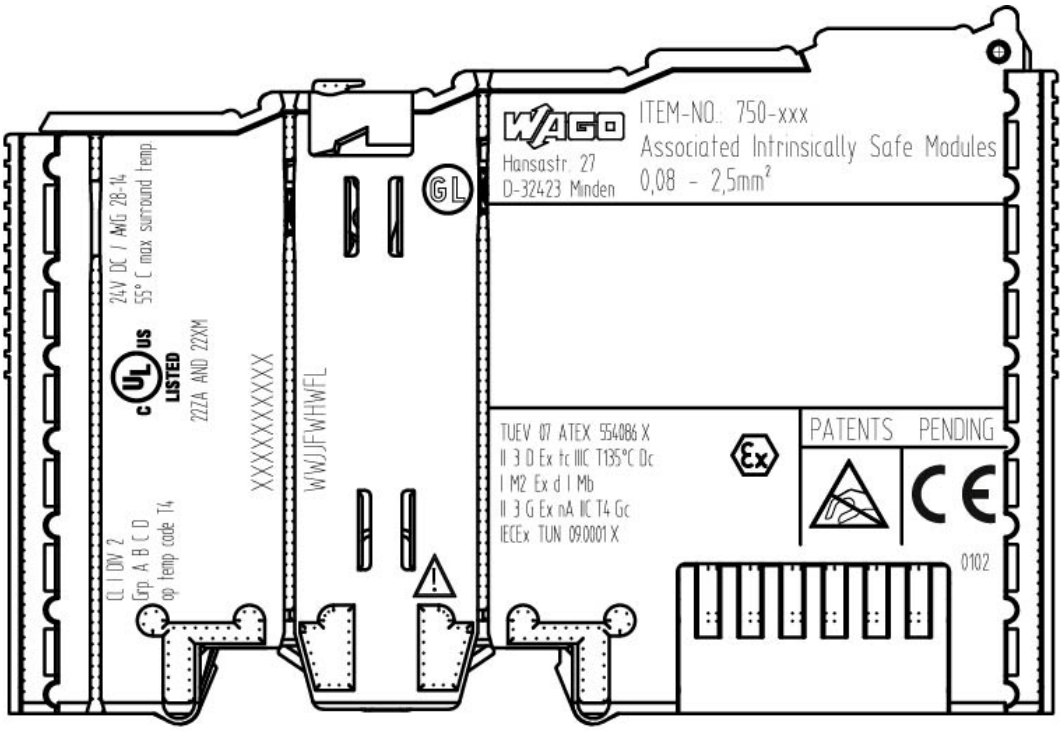

Figure 46: Marking Example per ATEX and IECEx

TUEV 07 ATEX 554086 X
II 3 D Ex tc IIIC T135°C Dc
I M2 Ex d I Mb
II 3 G Ex nA IIC T4 Gc
IECEx TUN 09.0001 X

Figure 47: Text Detail – Marking Example per ATEX and IECEx

Table 67: Description of the Marking Example per ATEX and IECEx

Marking Text	Description
TUEV 07 ATEX 554086 X IECEx TUN 09.0001 X	Approving authority or certificate numbers
Dust	
II	Device group: All except mining
3 D	Device category 3 (Zone 22)
Ex	Explosion protection mark
tc	Protection type: Protection by enclosure
IIIC	Dust group: Explosive dust atmosphere
T135°C	Maximum surface temperature of the enclosure (no dust bin)
Dc	Level of equipment protection (EPL)
Mining	
I	Device group: Mining
M2	Device category: High degree of safety
Ex	Explosion protection mark
d	Protection type: Pressure-tight encapsulation
I	Electrical devices in potentially explosive mines
Mb	Level of equipment protection (EPL)
Gases	
II	Device group: All except mining
3 G	Device category 3 (Zone 2)
Ex	Explosion protection mark
nA	Protection type: Non-sparking equipment
IIC	Gas group: Explosive gas atmosphere
T4	Temperature class: Max. surface temperature 135 °C
Gc	Level of equipment protection (EPL)

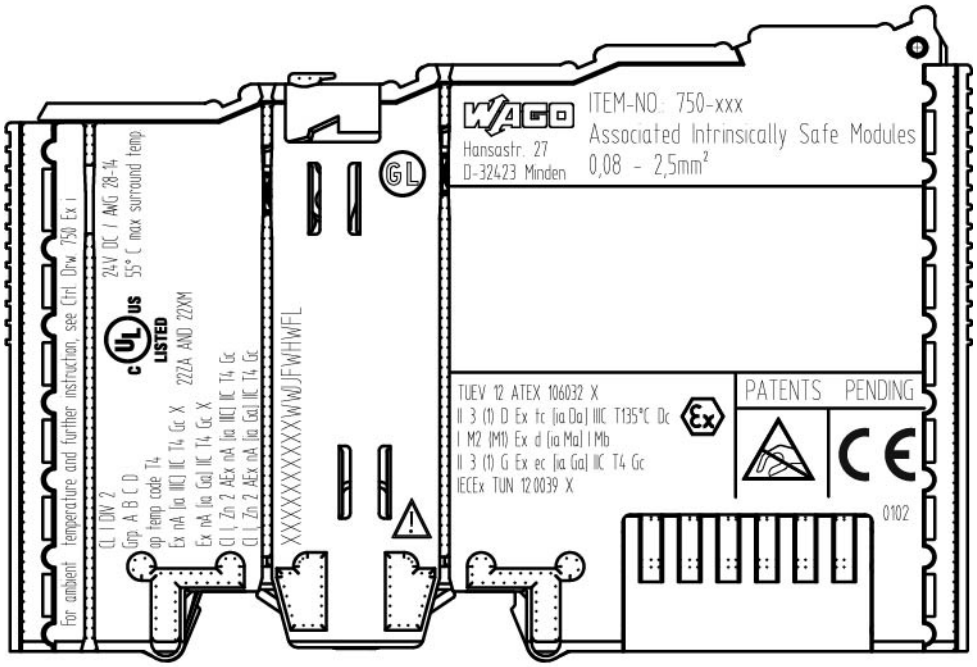

Figure 48: Marking Example of an Approved I/O Module Ex i
per ATEX and IECEx

TUEV 12 ATEX 106032 X
II 3 (1) D Ex tc [ia Da] IIIC T135°C Dc
I M2 (M1) Ex d [ia Ma] I Mb
II 3 (1) G Ex ec [ia Ga] IIC T4 Gc
IECEx TUN 12 0039 X

Figure 49: Text Detail – Marking Example of an Approved I/O Module Ex i
per ATEX and IECEx

Table 68: Description of the Marking Example of an Approved I/O Module Ex i per ATEX and IECEx

Marking Text	Description
TUEV 12 ATEX 106032 X IECEx TUN 12 0039 X	Approving authority or certificate numbers
Dust	
II	Device group: All except mining
3 (1) D	Device category 3 (Zone 22) that contain safety devices for Category 1 (Zone 20) devices
Ex	Explosion protection mark
tc	Protection type: Protection by enclosure
[ia Da]	Protection type and equipment protection level (EPL): Associated equipment with intrinsically safe circuits for Zone 20
IIIC	Dust group: Explosive dust atmosphere
T135°C	Max. surface temperature of the enclosure (no dust bin)
Dc	Level of equipment protection (EPL)
Mining	
I	Device group: Mining
M2 (M1)	Device category: High level of safety with circuits that offer a very high level of safety
Ex	Explosion protection mark
d	Protection type: Pressure-tight encapsulation
[ia Ma]	Protection type and equipment protection level (EPL): Associated equipment with intrinsically safe circuits
I	Electrical devices in potentially explosive mines
Mb	Level of equipment protection (EPL)
Gases	
II	Device group: All except mining
3 (1) G	Device category 3 (Zone 2) that contain safety devices for Category 1 (Zone 0) devices
Ex	Explosion protection mark
ec	Protection type: Increased safety
[ia Ga]	Protection type and equipment protection level (EPL): Associated equipment with intrinsically safe circuits for Zone 0
IIC	Gas group: Explosive gas atmosphere
T4	Temperature class: Max. surface temperature 135 °C
Gc	Level of equipment protection (EPL)

12.1.2 Marking for the United States of America (NEC) and Canada (CEC)

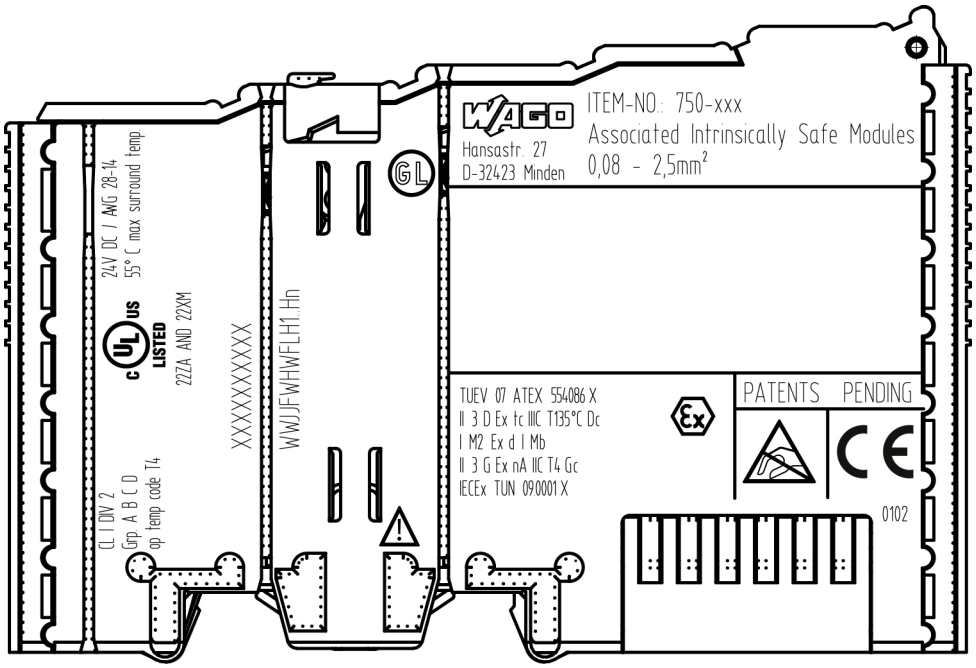

Figure 50: Marking Example According to NEC

CL I DIV 2
Grp. A B C D
op temp code T4

Figure 51: Text Detail – Marking Example According to NEC 500

Table 69: Description of Marking Example According to NEC 500

Marking	Description
CL I	Explosion protection (gas group)
DIV 2	Area of application
Grp. A B C D	Explosion group (gas group)
op temp code T4	Temperature class

Cl I, Zn 2 AEx nA [ia Ga] IIC T4 Gc

Figure 52: Text Detail – Marking Example for Approved Ex i I/O Module According to NEC 505

Table 70: Description of Marking Example for Approved Ex i I/O Module According to NEC 505

Marking	Description
Cl I,	Explosion protection group
Zn 2	Area of application
AEx	Explosion protection mark
nA	Type of protection
[ia Ga]	Type of protection and equipment protection level (EPL): Associated apparatus with intrinsic safety circuits for use in Zone 20
IIC	Group
T4	Temperature class
Gc	Equipment protection level (EPL)

Cl I, Zn 2 AEx nA [ia IIIC] IIC T4 Gc

Figure 53: Text Detail – Marking Example for Approved Ex i I/O Module According to NEC 506

Table 71: Description of Marking Example for Approved Ex i I/O Modules According to NEC 506

Marking	Description
Cl I,	Explosion protection group
Zn 2	Area of application
AEx	Explosion protection mark
nA	Type of protection
[ia IIIC]	Type of protection and equipment protection level (EPL): Associated apparatus with intrinsic safety circuits for use in Zone 20
IIC	Group
T4	Temperature class
Gc	Equipment protection level (EPL)

Ex nA [ia IIIC] IIC T4 Gc X
Ex nA [ia Ga] IIC T4 Gc X

Figure 54: Text Detail – Marking Example for Approved Ex i I/O Modules According to CEC 18 attachment J

Table 72: Description of Marking Example for Approved Ex i I/O Modules According to CEC 18 attachment J

Marking	Description
Dust	
Ex	Explosion protection mark
nA	Type of protection
[ia IIIC]	Type of protection and equipment protection level (EPL): Associated apparatus with intrinsic safety circuits for use in Zone 20
IIC	Group
T4	Temperature class
Gc	Equipment protection level (EPL)
X	Symbol used to denote specific conditions of use
Gases	
Ex	Explosion protection mark
nA	Type of protection
[ia Ga]	Type of protection and equipment protection level (EPL): Associated apparatus with intrinsic safety circuits for use in Zone 0
IIC	Group
T4	Temperature class
Gc	Equipment protection level (EPL)
X	Symbol used to denote specific conditions of use

12.2 Installation Regulations

For the installation and operation of electrical equipment in hazardous areas, the valid national and international rules and regulations which are applicable at the installation location must be carefully followed.

12.2.1 Special Notes including Explosion Protection

The following warning notices are to be posted in the immediately proximity of the WAGO I/O SYSTEM 750 (hereinafter “product”):

WARNING – DO NOT REMOVE OR REPLACE FUSED WHILE ENERGIZED!

WARNING – DO NOT DISCONNECT WHILE ENERGIZED!

WARNING – ONLY DISCONNECT IN A NON-HAZARDOUS AREA!

Before using the components, check whether the intended application is permitted in accordance with the respective printing. Pay attention to any changes to the printing when replacing components.

The product is an open system. As such, the product must only be installed in appropriate enclosures or electrical operation rooms to which the following applies:

- Can only be opened using a tool or key
- Inside pollution degree 1 or 2
- In operation, internal air temperature within the range of 0 °C ≤ Ta ≤ +55 °C or −20 °C ≤ Ta ≤ +60 °C for components with extension number …/025-xxx or −40 °C ≤ Ta ≤ +70 °C for components with extension number …/040-xxx
- Minimum degree of protection: min. IP54 (acc. to EN/IEC 60529)
- For use in Zone 2 (Gc), compliance with the applicable requirements of the standards EN/IEC/ABNT NBR IEC 60079-0, -7, -11, -15
- For use in Zone 22 (Dc), compliance with the applicable requirements of the standards EN/IEC/ABNT NBR IEC 60079-0, -7, -11, -15 and -31
- For use in mining (Mb), minimum degree of protection IP64 (acc. EN/IEC 60529) and adequate protection acc. EN/IEC/ABNT NBR IEC 60079-0 and -1
- Depending on zoning and device category, correct installation and compliance with requirements must be assessed and certified by a “Notified Body” (ExNB) if necessary!

Explosive atmosphere occurring simultaneously with assembly, installation or repair work must be ruled out. Among other things, these include the following activities

- Insertion and removal of components
- Connecting or disconnecting from fieldbus, antenna, D-Sub, ETHERNET or USB connections, DVI ports, memory cards, configuration and programming interfaces in general and service interface in particular:
    - Operating DIP switches, coding switches or potentiometers
    - Replacing fuses

Wiring (connecting or disconnecting) of non-intrinsically safe circuits is only permitted in the following cases

- The circuit is disconnected from the power supply.
- The area is known to be non-hazardous.

Outside the device, suitable measures must be taken so that the rated voltage is not exceeded by more than 40 % due to transient faults (e.g., when powering the field supply).

Product components intended for intrinsically safe applications may only be powered by 750-606 or 750-625/000-001 bus supply modules.

Only field devices whose power supply corresponds to overvoltage category I or II may be connected to these components.

12.2.2 Special Notes Regarding UL Hazardous Location

For UL Hazardous Location acc. to UL File E198726, the following additional requirements apply:

- Use in Class I, Division 2, Group A, B, C, D or non-hazardous areas only
- ETHERNET connections are used exclusively for connecting to computer networks (LANs) and may not be connected to telephone networks or telecommunication cables
- **WARNING** – The radio receiver module 750-642 may only be used to connect to external antenna 758-910!
- **WARNING** – Product components with fuses must not be fitted into circuits subject to overloads!
  These include, e.g., motor circuits.
- **WARNING** – When installing I/O module 750-538, “Control Drawing No. 750538” in the manual must be strictly observed!

Information

Additional Information
Proof of certification is available on request.
Also take note of the information given on the operating and assembly instructions.
The manual, containing these special conditions for safe use, must be readily available to the user.

List of Figures

List of Tables

WAGO Kontakttechnik GmbH & Co. KG
Postfach 2880 • D - 32385 Minden
Hansastraße 27 • D - 32423 Minden
Phone: +49 571 887 – 0
Fax: +49 571 887 – 844169
E-Mail: info@wago.com
Internet: www.wago.com