8-channel digital output; 24 VDC; 0.5 A

Item No.: 750-530

8-channel digital output; 24 VDC; 0.5 A

Marking

RoHS ✓
Compliant

Business data

Supplier	*WAGO*
Item no.	*750-530*
GTIN / EAN	*4045454686901*
Content	*1*
Order amount	*1*
Customer item number	

Notes

Item description:The digital output module provides 8 channels in a width of just 12mm (0.47in.). The connected load is switched via digital output from the control system.All outputs are short-circuit-protected.Field and system levels are electrically isolated.

Technical data

Miscellaneous	
Packaging type	*BOX*
Number of digital outputs	*8*
Total number of channels (module)	*8*
Type of signal	*Voltage*

Technical data	
Type of signal voltage	*DC 24 V*
Actuator connection	*8 x (1-conductor)*
Output characteristic	*high-side switching*
Output current per channel [A]	*0.5 [A]*
Output current	*short-circuit-protected*
Switching frequency max.	*2 kHz*
Type of load	*resistive, inductive, lamps*
Schaltfrequenz max [Hz]	*2000 [Hz]*
Inductive load switch-off energy dissipation W (max.) [J]	*0.9 [J]*
Datenbreite Ausgangsdaten (intern) max. [Bit]	*8 [Bit]*
System supply voltage	*DC 5 V; über Datenkontakte*
Current consumption, system supply [mA]	*25 [mA]*
Field supply voltage	*DC 24 V (-25 … +30 %); über Leistungskontakte*
Current consumption, field supply (module with no external l	*15 [mA]*
Isolation field – system	*500 V AC (1 min)*
Indicators	*LED (A-H) green: Status DO 1 … DO 8*
Number of incoming power jumper contacts	*2*
Number of outgoing power jumper contacts	*2*
Current carrying capacity of the power jumper contacts [A]	*10 [A]*
Number of connections: Inputs/outputs	*8*
Connection technology: inputs/outputs	*CAGE CLAMP®*
Connection type (1)	*Ein-/Ausgänge*
Solid conductor	*0.08 … 2.5 mm² / 28 … 14 AWG*
Fine-stranded conductor	*0.08 … 2.5 mm² / 28 … 14 AWG*
Strip length	*8 … 9 mm / 0.31 … 0.35 Inch*
Width	*12 mm / 0.472 Inch*
Height	*67.8 mm / 2.669 Inch*
Height from upper-edge of DIN-35 rail	*60.6 mm / 2.386 Inch*
Depth	*100 mm / 3.937 Inch*
Type of mounting	*Carrier rail 35 x 15*
Color	*light gray*
Housing material	*Polycarbonate, polyamide 6.6*
Fire load [MJ]	*1.034 [MJ]*
Weight [g]	*49.754 [g]*

Technical data	
Conformity marking	*CE*
Ambient temperature (operation)	*0 … 55 °C*
Ambient temperature (storage)	*-25 … 85 °C*
Degree of protection	*IP20*
Degree of pollution (5)	*2 per IEC 61131-2*
Mounting position	*any*
Relative air humidity (no condensation) [%]	*95 [%]*
Vibration resistance	*acc. to IEC 60068-2-6*
Shock resistance	*acc. to IEC 60068-2-27*
EMC immunity to interference	*acc. to EN 61000-6-2, marine applications*
EMC emission of interference	*acc. to EN 61000-6-4, marine applications*
Exposure to pollutants	*gemäß IEC 60068-2-42 und IEC 60068-2-43*
Zulässige Schadstoffkonzentration H2S bei einer r	*10 [ppm]*
Zulässige Schadstoffkonzentration SO2 bei einer r	*25 [ppm]*
Product Family	*750/753 Series I/O-System*
Main product function	*Digital output*
Product type	*Digital modules*

Images & drawings

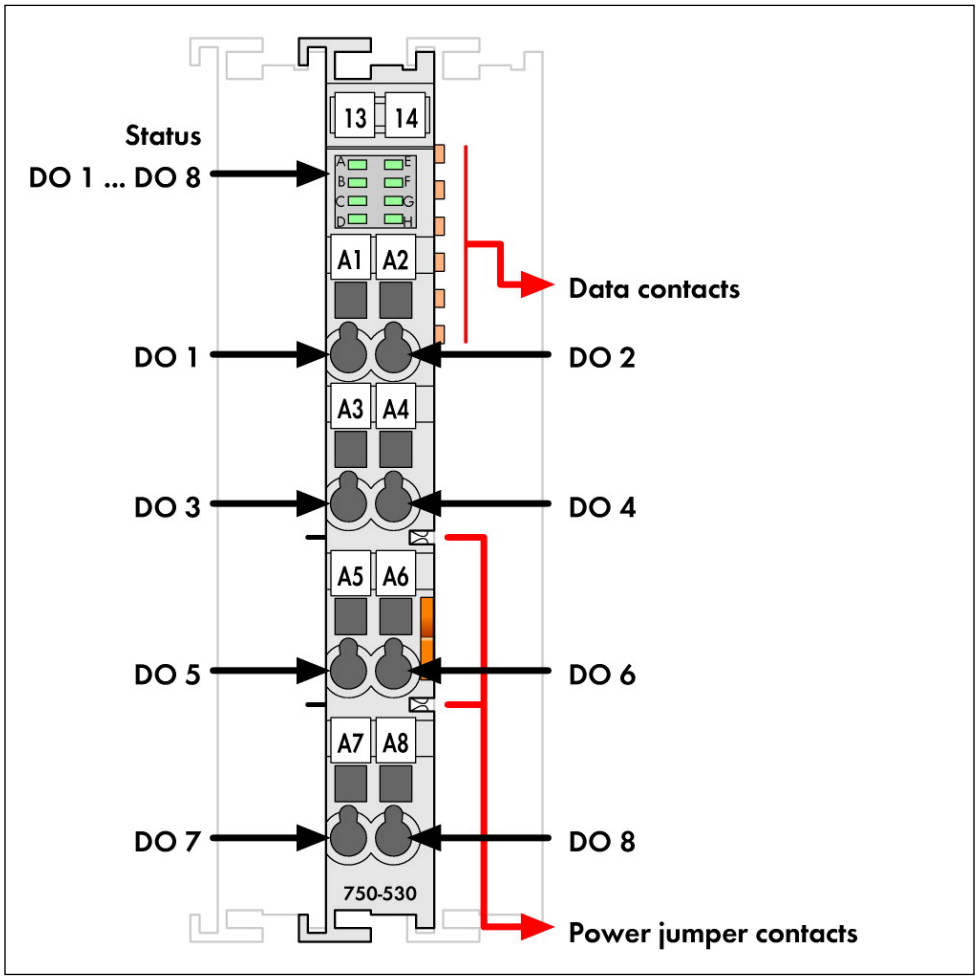
Status
DO 1 ... DO 8
13
14
A1
A2
A3
A4
A5
A6
A7
A8
Data contacts
DO 1
DO 2
DO 3
DO 4
DO 5
DO 6
DO 7
DO 8
750-530
Power jumper contacts

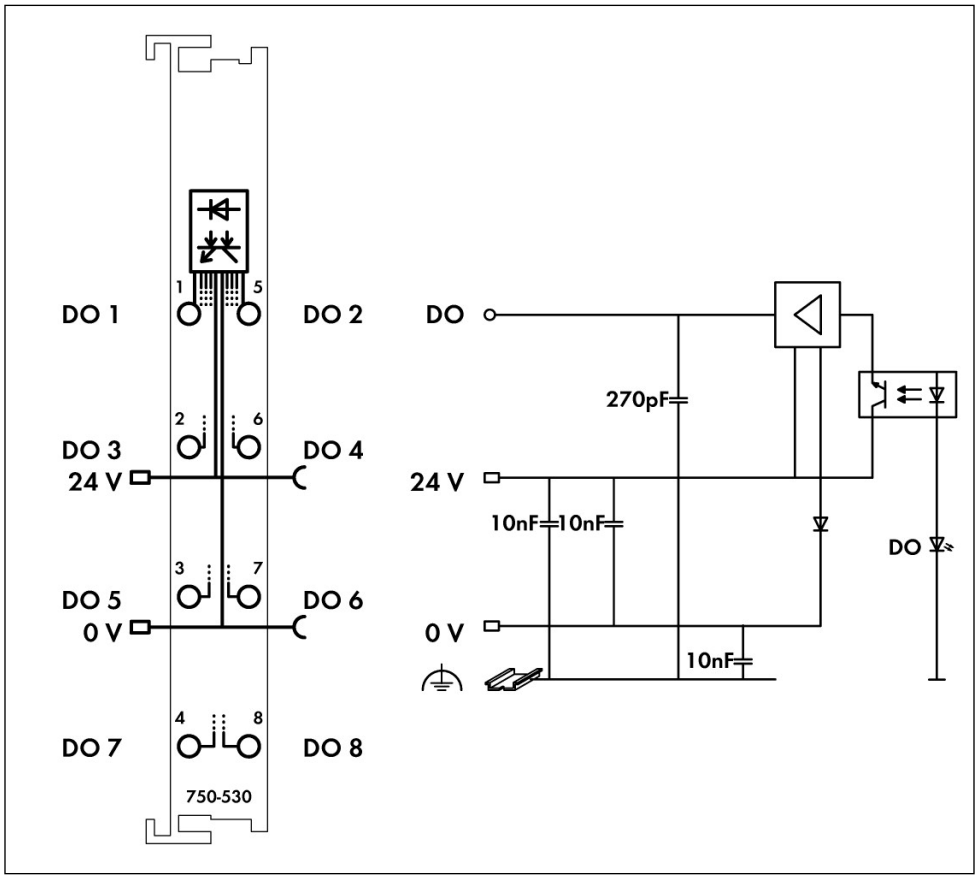

Address

WAGO Kontakttechnik GmbH & Co. KG
Hansastr. 27
32423 Minden
Telefon: 0571/887-0
Fax: 0571/887-169
http://www.wago.com
© WAGO Kontakttechnik GmbH & Co. KG
Technische Änderungen und Irrtümer vorbehalten.