UM -PROFIL - Profile

2952020

https://www.phoenixcontact.com/pc/products/2952020

Please be informed that the data shown in this PDF document is generated from our online catalog. Please find the complete data in the user documentation. Our general terms of use for downloads are valid.

Press-drawn section housings, Basic profile, color: green, open, length: 2000 mm, depth: 127.5 mm, Note: profile length = PCB length - 3 mm (UM 25 and UM 45)
Profile length = PCB length - 3.6 mm (UM_72, UM 100, UM_108)
Profile length =PCB length - 9.5 mm (UM_122)

Your advantages

- Flexible size and shape
- Fast mounting
- Inexpensive as a result of reducing the number of separate housing parts

Commercial data

Item number	2952020
Packing unit	1 pc
Minimum order quantity	1 pc
Note	Made to order (non-returnable)
Product key	ACHDBA
Catalog page	Page 754 (C-1-2013)
Customs tariff number	39162000
Country of origin	DE

Technical data

Product properties

Product type	Complete housing
Product family	UM Profil
Type	Basic profile
Housing type	Press-drawn section housings
Housing series	UM

Dimensions

Dimensional drawing	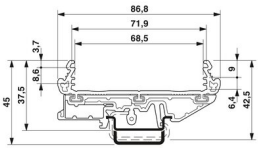
Depth	127.5 mm
	25 mm
	45 mm
Length	2000 mm

Material specifications

Color	green
Flammability rating according to UL 94	V0
Surface characteristics	untreated
Housing material	PVC

Environmental and real-life conditions

Ambient conditions

Ambient temperature (operation)	-15 °C ... 50 °C

Drawings

Dimensional drawing

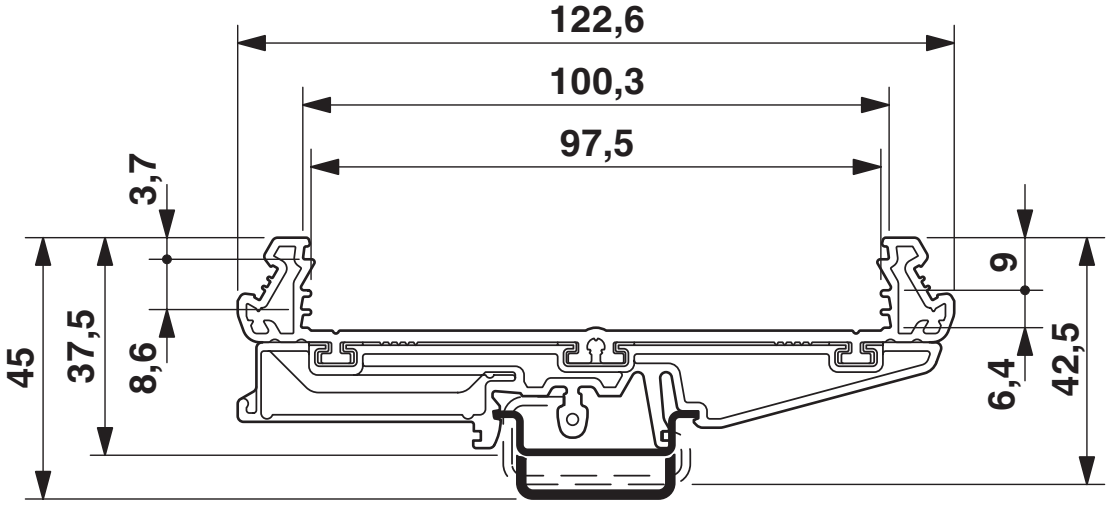

Dimensional drawing

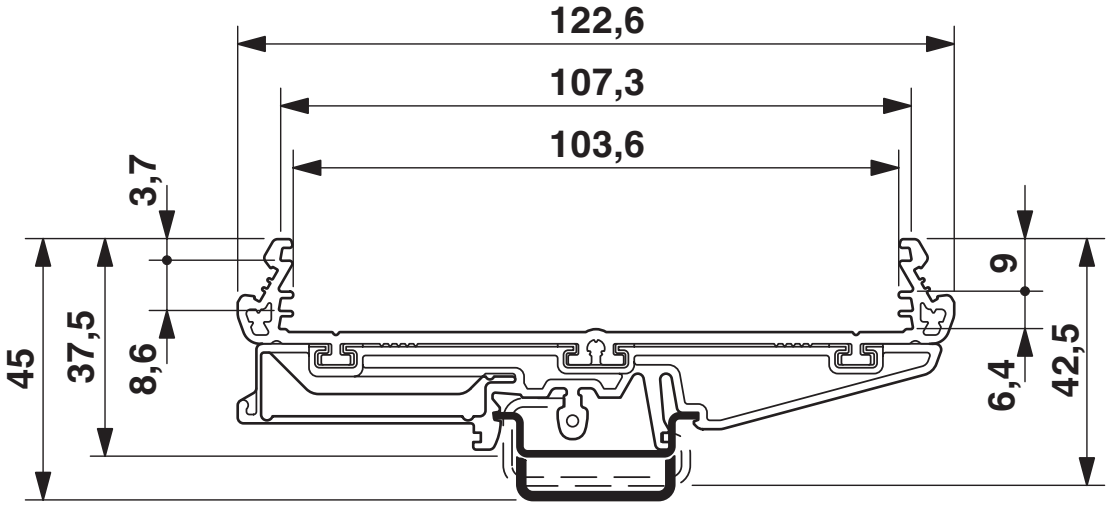

Dimensional drawing

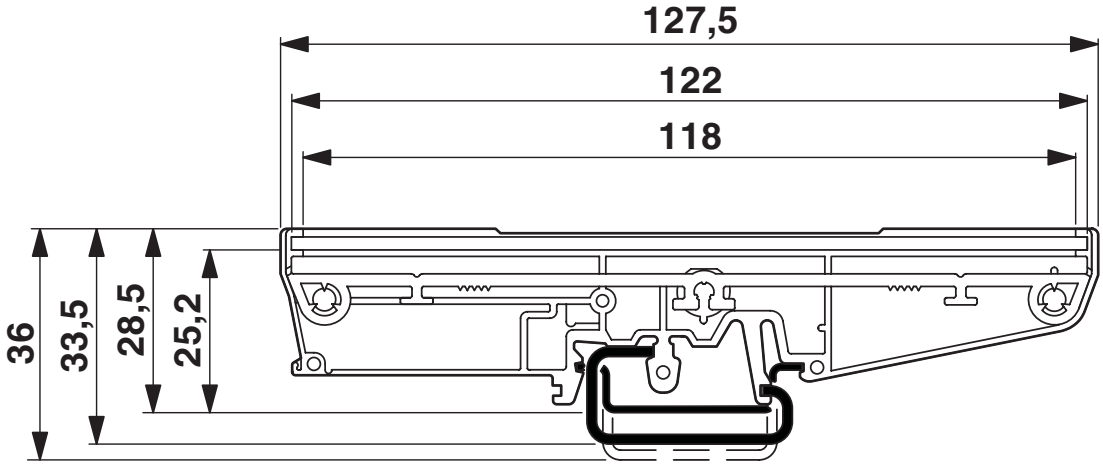

Dimensional drawing

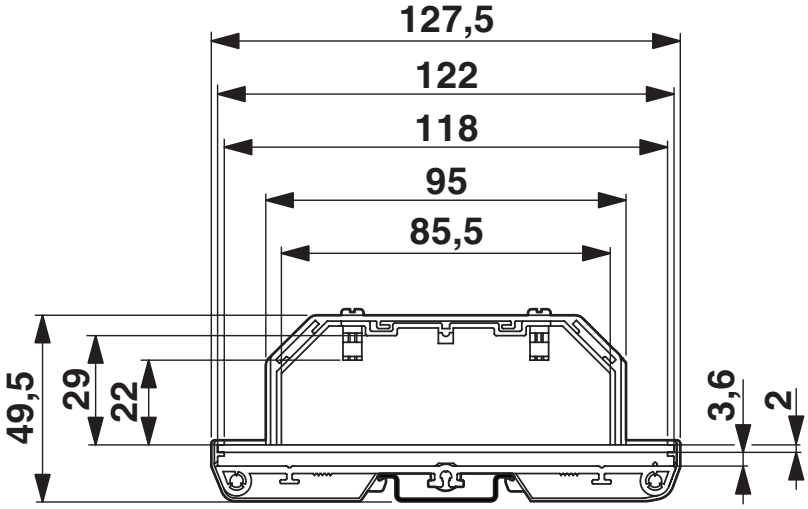

Dimensional drawing

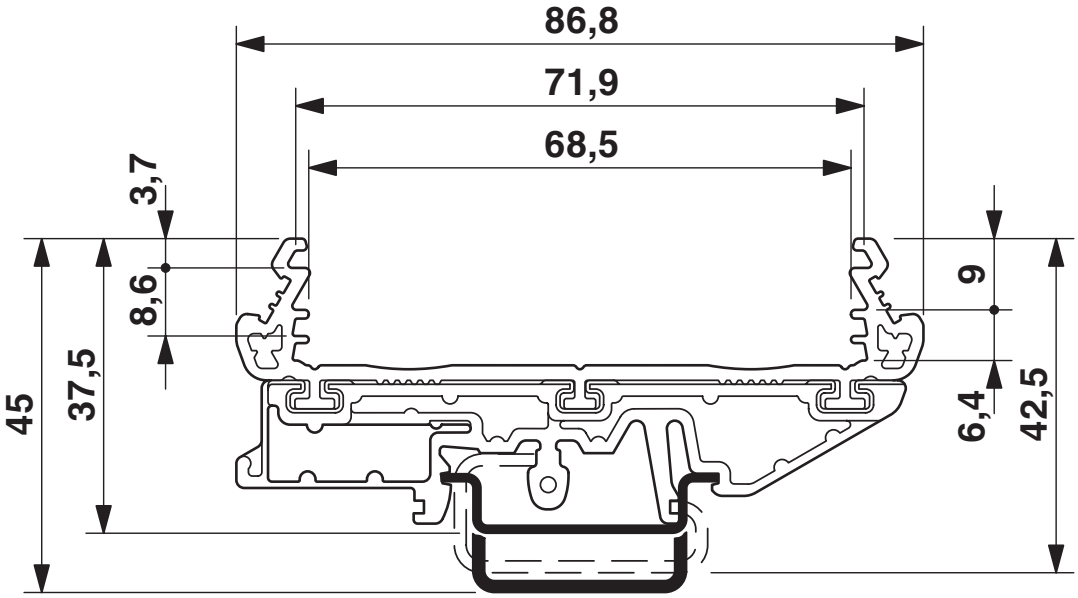

Approvals

To download certificates, visit the product detail page: https://www.phoenixcontact.com/pc/products/2952020

EAC
Approval ID: B.01687

Classifications

ECLASS

ECLASS-11.0	27182791
ECLASS-12.0	27182791
ECLASS-13.0	27190601

ETIM

ETIM 8.0	EC001031

UNSPSC

UNSPSC 21.0	31261500

Environmental product compliance

China RoHS	Environmentally friendly use period: unlimited = EFUP-e
	No hazardous substances above threshold values

Accessories

PMB - Module marker carrier

1004364

https://www.phoenixcontact.com/pc/products/1004364

Phoenix module marker carrier, for labeling modules and PCBs, for hole diameter 3.9 to 4.1 mm, thickness of wall or board 1.5 - 2.0 mm, labeling with insert strips ESL, EST or ES/LP-BW-GB, lettering field: 29 x 8 mm

B-STIFT - Marker pen

1051993

https://www.phoenixcontact.com/pc/products/1051993

Marker pen, for manual labeling of unprinted Zack strips, smear-proof and waterproof, line thickness 0.5 mm

UM122-FE - Foot element

2909471

https://www.phoenixcontact.com/pc/products/2909471

UM 122 FE foot element, for UM 122 profile housing

AP-ES - Insert strip

5022685

https://www.phoenixcontact.com/pc/products/5022685

Insert strip, white, unlabeled, mounting type: insert, for terminal block width: 35 mm, lettering field size: 35 x 500 mm

UM 72-FE - Foot element

2959382

https://www.phoenixcontact.com/pc/products/2959382

Foot element, 72 mm wide, for mounting on NS 32 or NS 35/7.5, below profile housing UM 72.

UMK-BF - Mounting flange

2976077

https://www.phoenixcontact.com/pc/products/2976077

Mounting flange, for mounting directly on the wall

UM 45-SEAS - Lateral element

2907554

https://www.phoenixcontact.com/pc/products/2907554

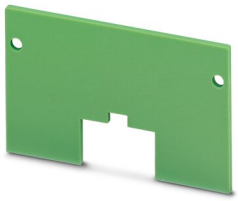

Press-drawn section housings, Lateral element, color: green (6021), with snap-on foot, height: 45 mm, Note: when using this lateral element, profile length = PCB length.

UM 25/45-FEO 200 - Foot element

2959434

https://www.phoenixcontact.com/pc/products/2959434

Foot element, is inserted in the profile housing, limit stop with screw. Mounted at right angles to the NS 35/7.5 DIN rail

SS-ZB WH - Contactor marker - zack marker strip

5031171

https://www.phoenixcontact.com/pc/products/5031171

Contactor marker - zack marker strip, Strip, white, unlabeled, can be labeled with: CMS-P1-PLOTTER, mounting type: snapped, lettering field size: 20 x 8 mm, Number of individual labels: 5

SS-ZB YE - Contactor marker - zack marker strip

5031650

https://www.phoenixcontact.com/pc/products/5031650

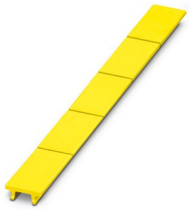

Contactor marker - zack marker strip, Strip, yellow, unlabeled, can be labeled with: CMS-P1-PLOTTER, mounting type: snapped, lettering field size: 20 x 8 mm, Number of individual labels: 5

UM108-FE - Foot element

2959463

https://www.phoenixcontact.com/pc/products/2959463

Foot element, 107.5 mm wide, for mounting on NS 32 or NS 35/7.5, below profile housing UM 108.

UM 45-SE - Lateral element

2906131

https://www.phoenixcontact.com/pc/products/2906131

Press-drawn section housings, Lateral element, color: green (6021), without snap-on foot, depth: 45 mm, Note: when using this lateral element, profile length = PCB length.

UM 45-SES - Lateral element

2959308

https://www.phoenixcontact.com/pc/products/2959308

Side element, with marker groove, labeling with SS-ZB. Width: 11 mm, length: 45 mm, height: 21 mm

UM 45-SEK - Lateral element

2959311

https://www.phoenixcontact.com/pc/products/2959311

Side element, with cable fixture, 6 mm wide, cables fixed with cable ties, these are not included in the scope of delivery.

UM 45-SEFE O.N. - Lateral element

2959793

https://www.phoenixcontact.com/pc/products/2959793

Press-drawn section housings, Lateral element, color: green (6021), with snap-on foot, depth: 45 mm, Note: when using this lateral element, profile length = PCB length.

UM 72-SE - Lateral element

2959337

https://www.phoenixcontact.com/pc/products/2959337

Side element, 5 mm wide, PCB width: 72 mm

UM 72-SEPEF/L - Lateral element

2906487

https://www.phoenixcontact.com/pc/products/2906487

Side element, left, with foot, width: 5 mm, length: 72 mm, for mounting on NS 32 or NS 35/7.5, with PE contact to the DIN rail

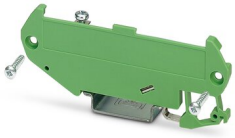

UM 72-SEFE/R - Lateral element

2959353

https://www.phoenixcontact.com/pc/products/2959353

Side element, right, with foot, width: 5 mm, width: 72 mm, for mounting on NS 32 or NS 35/7.5

UM 72-SEFE/L - Lateral element

2959340

https://www.phoenixcontact.com/pc/products/2959340

Side element, left, with foot, width: 5 mm, length: 72 mm, for mounting on NS 32 or NS 35/7.5

UM108 N-SEPEF/L-A73 - Lateral element

2709370

https://www.phoenixcontact.com/pc/products/2709370

Side element with foot, low-profile design, left, for 73 mm wide U-shaped cover, with PE contact to the DIN rail.

UM108-SEPEF/L-A73 - Lateral element

2906513

https://www.phoenixcontact.com/pc/products/2906513

Side element with foot, tall design, left, for 73 mm wide U-shaped cover, with PE contact to the DIN rail.

UM108-SEPEF/L-A60 - Lateral element

2906500

https://www.phoenixcontact.com/pc/products/2906500

Side element with foot, tall design, left-hand, for 60 mm wide U-shaped cover, with PE contact to the DIN rail.

UM108 N-SEFE/L-A73 - Lateral element

2709367

https://www.phoenixcontact.com/pc/products/2709367

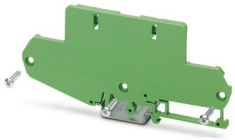

Side element, with foot, low-profile version, left-hand, for 73 mm wide U-shaped cover.

UM108-SEFE/L - Lateral element

2959696

https://www.phoenixcontact.com/pc/products/2959696

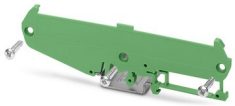

Side element with foot, 5 mm wide (left), for mounting on NS 32 or NS 35/7.5.
PCB width: 107.5 mm

UM108 N-SEFE/R-A73 - Lateral element

2709354

https://www.phoenixcontact.com/pc/products/2709354

Side element, with foot, low-profile version, right-hand, for 73 mm wide U-shaped cover.

UM108-SEFE/R - Lateral element

2959683

https://www.phoenixcontact.com/pc/products/2959683

Side element with foot, 5 mm wide (right), for mounting on NS 32 or NS 35/7.5.
PCB width: 107.5 mm

UM108-SE-A73 - Lateral element

2959751

https://www.phoenixcontact.com/pc/products/2959751

Side element, without foot, tall version, for 73 mm wide U-shaped cover.

UM108-SEFE/R-A60 - Lateral element

2959706

https://www.phoenixcontact.com/pc/products/2959706

Side element, with foot, tall version, right-hand, for 60 mm wide U-shaped cover.

UM108-SEFE/L-A73 - Lateral element

2959735

https://www.phoenixcontact.com/pc/products/2959735

Side element, with foot, tall version, left-hand, for 73 mm wide U-shaped cover.

UM108-SE-A60 - Lateral element

2959748

https://www.phoenixcontact.com/pc/products/2959748

Side element, without foot, tall version, for 60 mm wide U-shaped cover.

UM108-SEFE/R-A73 - Lateral element

2959719

https://www.phoenixcontact.com/pc/products/2959719

Side element, with foot, tall version, right-hand, for 73 mm wide U-shaped cover.

UM108-SE - Lateral element

2959476

https://www.phoenixcontact.com/pc/products/2959476

Side element, 5 mm wide, PCB width: 107.5 mm

UM108 N-SE-A73 - Lateral element

2709383

https://www.phoenixcontact.com/pc/products/2709383

Side element, without foot, low-profile version, for 73 mm wide U-shaped cover.

UM108-SEFE/L-A60 - Lateral element

2959722

https://www.phoenixcontact.com/pc/products/2959722

Side element, with foot, tall version, left-hand, for 60 mm wide U-shaped cover.

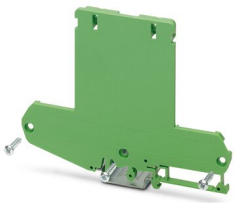

UM122-SEFE/R - Lateral element

2908786

https://www.phoenixcontact.com/pc/products/2908786

Side element, right, with foot, width: 5 mm wide, length: 122 mm, for mounting on DIN rail NS 32 or NS 35/7.5

UM122-SEFE/L - Lateral element

2908773

https://www.phoenixcontact.com/pc/products/2908773

Side element, left, with foot, width: 5 mm, length: 122 mm, for mounting on DIN rail NS 32 or NS 35/7.5

UM122-SEMFE-A92 - Lateral element

2909442

https://www.phoenixcontact.com/pc/products/2909442

Lateral element, to attach profile cover UM 122 to DIN rail NS 35/7.5, with M3 screw fixture, tightening torque 0.25 Nm

UM108-SEPEF/L - Lateral element

2906490

https://www.phoenixcontact.com/pc/products/2906490

Press-drawn section housings, Lateral element (left), color: green, with snap-on foot and PE contact

Phoenix Contact 2023 © - all rights reserved
https://www.phoenixcontact.com

PHOENIX CONTACT GmbH & Co. KG
Flachsmarktstraße 8
D-32825 Blomberg
+49 (0) 5235-3 00
info@phoenixcontact.com