ASSMANN WSW components GmbH
Auf dem Schüffel 1
D-58513 Lüdenscheid
Tel.: +49-2351 - 554-0
Fax: +49-2351 - 554-99226

Product Change Notification(PCN)

Issue Date: 14.02.2011
Modification/Revision Date: 13.08.2012

Connector-MINI DIN

Change Notification # PCN201108001

Change Description:

Contact and Shell Plating Changed

A-DIO-FSxx	**Tin plated shell changed to Nickel plated, changed PCB layout(see page 3&4)**
A-DIO-FS06 GREEN & PURPLE	**Changed PCB layout(see page 5)**
A-DIO-Mxx	**Gold flash/Tin plated contact changed to full gold flash, Changed PCB layout(see page 6~10)**
A-DIO-PS06	**Changed PCB layout(see page 11)**
A-DIO-TOP/xx	**Gold flash/Tin plated contact changed to full gold flash, changed solder tail length to 4mm, changed PCB layout(see page 12~15)**

Date of change and Implementation:

14.02.2010

Key Characteristics of Change:

Plating, P.C.B layout

Products Affected:

A-DIO-FSxx	
A-DIO-FSxx-SP	**phased out**
A-DIO-FSxx-SP-SM	**phased out**
A-DIO-FS06 GREEN & PURPLE	
A-DIO-Mxx	
A-DIO-PS06	
A-DIO-TOPxx	

Reason for Change:

Production plant change

Response :

No response to this notification is required.
Please contact an ASSMANN WSW components GmbH Sales Representative to obtain qualification samples.

ASSMANN WSW components GmbH
Auf dem Schüffel 1
D-58513 Lüdenscheid
Tel.: +49-2351 - 554-0
Fax: +49-2351 - 554-99226

Product Change Notification(PCN)

Issue Date: 14.02.2011
Modification/Revision Date: 13.08.2012

Reference Documents / Attachments:

Document: Drawing

ASSMANN WSW P/N	Drawing Number
A-DIO-FS03	ASS 1622 CO
A-DIO-FS04	ASS 1021B CO
A-DIO-FS05	ASS 1021A CO
A-DIO-FS06	ASS 1021 CO
A-DIO-FS06/GREEN	ASS 3567 CO
A-DIO-FS06/PURPLE	ASS 3567 CO
A-DIO-FS07	ASS 3565 CO
A-DIO-FS08	ASS 3563 CO
A-DIO-M03	ASS 2542 CO
A-DIO-M04	ASS 0504 CO
A-DIO-M05	ASS 3564 CO
A-DIO-M06	ASS 1038 CO
A-DIO-M07	ASS 3566 CO
A-DIO-M08	ASS 1012 CO
A-DIO-PS06	ASS 1047 CO
A-DIO-TOP/03	ASS 1010C CO
A-DIO-TOP/04	ASS 1010 CO
A-DIO-TOP/05	ASS 1010B CO
A-DIO-TOP/06	ASS 1010A CO
A-DIO-TOP/08	ASS 1294 CO

As attached

PCN Revision History:

Date of Revision: 14.02.2011	**Revision Number: 00**
Date of Revision: 14.09.2011	Revision Number: 01
Date of Revision: 30.09.2011	Revision Number: 02
Date of Revision: 23.03.2012	Revision Number: 03
Date of Revision: 13.08.2012	Revision Number: 04

ASSMANN WSW components GmbH
Auf dem Schüffel 1
D-58513 Lüdenscheid
Tel.: +49-2351 - 554-0
Fax: +49-2351 - 554-99226

Product Change Notification(PCN)

Issue Date: 14.02.2011
Modification/Revision Date: 13.08.2012

Old version A-DIO-FS03 / A-DIO-FS07

revised:
dimension 13.50 (old) = 13.70 (new)
dimension 8.50 (old) = 8.78 (new)
dimension 0.90 (old) = 1.30 (new)

A-DIO-FS03

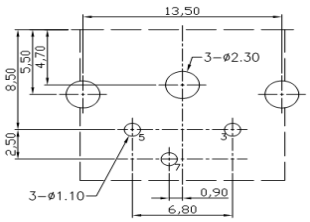

Recommended PCB Layout
[BOTTOM VIEW]

A-DIO-FS07

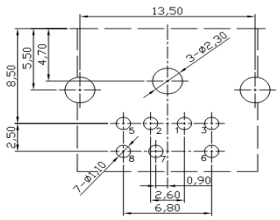

Recommended PCB Layout
[BOTTOM VIEW]

New version A-DIO-FS03 / A-DIO-FS07

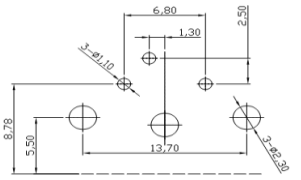

RECOMMENDED P.C.B. PATTERN LAYOUT
TOP VIEW (TOLERANCE: ±0,05)

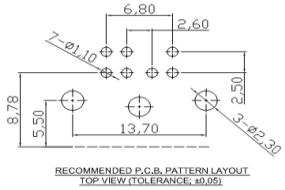

RECOMMENDED P.C.B. PATTERN LAYOUT
TOP VIEW (TOLERANCE: ±0,05)

As attached

PCN Revision History:

Date of Revision: 13.08.2012 Revision Number: 04

ASSMANN WSW components GmbH
Auf dem Schüffel 1
D-58513 Lüdenscheid
Tel.: +49-2351 - 554-0
Fax: +49-2351 - 554-99226

Product Change Notification(PCN)

Issue Date: 14.02.2011
Modification/Revision Date: 13.08.2012

Old version A-DIO-FS04 / A-DIO-FS05 / A-DIO-FS06 / A-DIO-FS08

revised:
dimension 13.50 (old) = 13.70 (new)
dimension 8.50 (old) = 8.78 (new)

example: 4-Pin

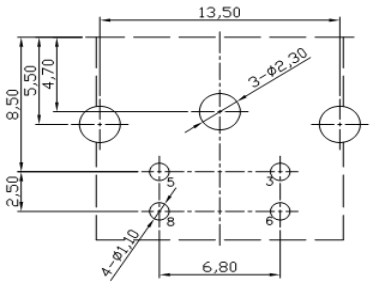

Recommended PCB Layout
[BOTTOM VIEW]

New version A-DIO-FS04 / A-DIO-FS05 / A-DIO-FS06 / A-DIO-FS08

example: 4-Pin

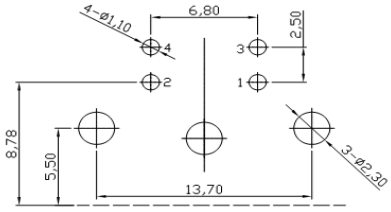

RECOMMENDED P.C.B. PATTERN LAYOUT
TOP VIEW (TOLERANCE: ±0,05)

As attached

PCN Revision History:

Date of Revision: 13.08.2012 Revision Number: 04

ASSMANN WSW components GmbH
Auf dem Schüffel 1
D-58513 Lüdenscheid
Tel.: +49-2351 - 554-0
Fax: +49-2351 - 554-99226

Product Change Notification(PCN)

Issue Date: 14.02.2011
Modification/Revision Date: 13.08.2012

Old version A-DIO-FS06 GREEN & PURPLE

revised:
dimension 13.50 (old) = 13.70 (new)
dimension 8.50 (old) = 8.78 (new)

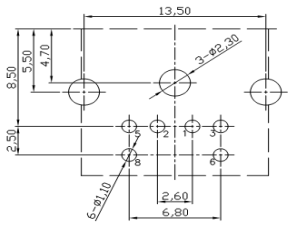

Recommended PCB Layout
[BOTTOM VIEW]

New version A-DIO-FS06 GREEN & PURPLE

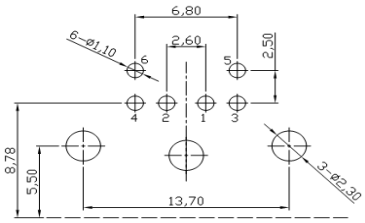

RECOMMENDED P.C.B. PATTERN LAYOUT
TOP VIEW (TOLERANCE: ±0,05)

As attached

PCN Revision History:

Date of Revision: 13.08.2012 Revision Number: 04

ASSMANN WSW components GmbH
Auf dem Schüffel 1
D-58513 Lüdenscheid
Tel.: +49-2351 - 554-0
Fax: +49-2351 - 554-99226

Product Change Notification(PCN)

Issue Date: 14.02.2011
Modification/Revision Date: 13.08.2012

Old version A-DIO-M03 / A-DIO-M04

revised:
dimension dia.1.10 (old) = dia.1.0 (new)
dimension 6.80 (old) = 6.50 (new)
design of hole for shield pins are different:
dia.2.30(old)=1x2.5(new)

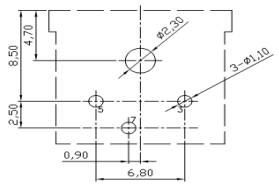

Recommended PCB Layout
[BOTTOM VIEW]

New version A-DIO-M03 / A-DIO-M04

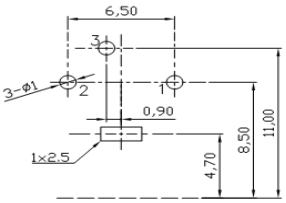

Recommended PCB Layout
Top View Tolerance(±0,05)

As attached

PCN Revision History:

Date of Revision: 13.08.2012 Revision Number: 04

ASSMANN WSW components GmbH
Auf dem Schüffel 1
D-58513 Lüdenscheid
Tel.: +49-2351 - 554-0
Fax: +49-2351 - 554-99226

Product Change Notification(PCN)

Issue Date: 14.02.2011
Modification/Revision Date: 13.08.2012

Old version A-DIO-M05

revised:
dimension dia.1.10 (old) = dia.1.0 (new)
dimension 6.80 (old) = 6.50 (new)
dimension 1.30 (old) = 1.50 (new)
design of hole for shield pins is different:
dia.2.30(old)=1x2.5(new)

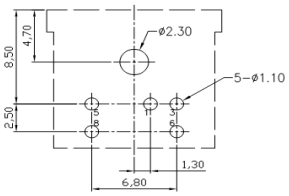

Recommended PCB Layout
[BOTTOM VIEW]

New version A-DIO-M05

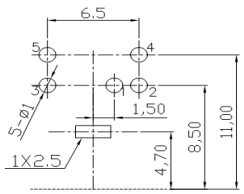

Recommended PCB Layout
Top View Tolerance(±0,05)

As attached

PCN Revision History:

Date of Revision: 13.08.2012 Revision Number: 04

ASSMANN WSW components GmbH
Auf dem Schüffel 1
D-58513 Lüdenscheid
Tel.: +49-2351 - 554-0
Fax: +49-2351 - 554-99226

Product Change Notification(PCN)

Issue Date: 14.02.2011
Modification/Revision Date: 13.08.2012

Old version A-DIO-M06

revised:
dimension dia.1.10 (old) = dia.1.0 (new)
dimension 6.80 (old) = 6.50 (new)
dimension 2.60 (old) = 3 (new)
design of hole for shield pins are different:
dia.2.30(old)=1x2.5(new)

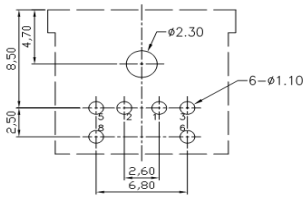

Recommended PCB Layout
[BOTTOM VIEW]

New version A-DIO-M06

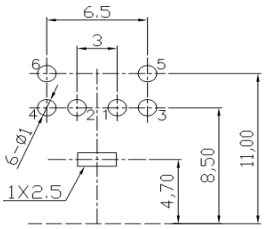

Recommended PCB Layout
Top View Tolerance(±0,05)

As attached

PCN Revision History:

Date of Revision: 13.08.2012 Revision Number: 04

ASSMANN WSW components GmbH
Auf dem Schüffel 1
D-58513 Lüdenscheid
Tel.: +49-2351 - 554-0
Fax: +49-2351 - 554-99226

Product Change Notification(PCN)

Issue Date: 14.02.2011
Modification/Revision Date: 13.08.2012

Old version A-DIO-M07

revised:
dimension dia.1.10 (old) = dia.1.0 (new)
dimension 6.80 (old) = 6.50 (new)
dimension 2.60 (old) = 3 (new)
dimension 0.90 (old) = 1 (new)
design of hole for shield pins are different:
dia.2.30(old)=1x2.5(new)

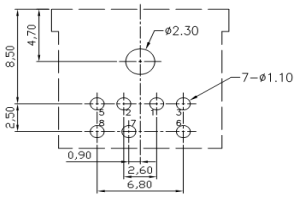

Recommended PCB Layout
[BOTTOM VIEW]

New version A-DIO-M07

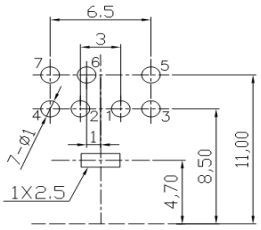

Recommended PCB Layout
Top View Tolerance(±0,05)

As attached

PCN Revision History:

Date of Revision: 13.08.2012 Revision Number: 04

ASSMANN WSW components GmbH
Auf dem Schüffel 1
D-58513 Lüdenscheid
Tel.: +49-2351 - 554-0
Fax: +49-2351 - 554-99226

Product Change Notification(PCN)

Issue Date: 14.02.2011
Modification/Revision Date: 13.08.2012

Old version A-DIO-M08

revised:
dimension dia.1.10 (old) = dia.1.0 (new)
dimension 6.80 (old) = 6.50 (new)
dimension 2.60 (old) = 3 (new)
dimension 0.90 (old) = 1 (new)
design of hole for shield pins are different:
dia.2.30(old)=1x2.5(new)

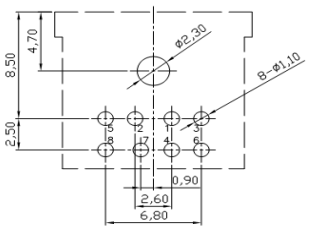

Recommended PCB Layout
[BOTTOM VIEW]

New version A-DIO-M08

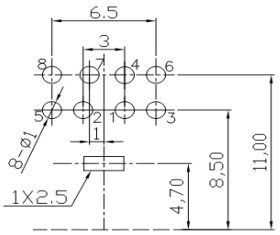

Recommended PCB Layout
Top View Tolerance(±0,05)

As attached

PCN Revision History:

Date of Revision: 13.08.2012 Revision Number: 04

ASSMANN WSW components GmbH
Auf dem Schüffel 1
D-58513 Lüdenscheid
Tel.: +49-2351 - 554-0
Fax: +49-2351 - 554-99226

Product Change Notification(PCN)

Issue Date: 14.02.2011
Modification/Revision Date: 13.08.2012

Old version A-DIO-PS06

revised:

dimension 6.80 (old) = 6.50 (new)
dimension 2.60 (old) = 3 (new)
dimension dia.2.30(old)=dia.2.5(new)

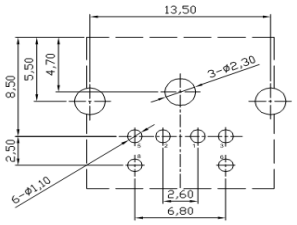

Recommended PADS Layout
(BOTTOM VIEW)
Tolerance For PCB Layout is ±0.05

New version A-DIO-PS06

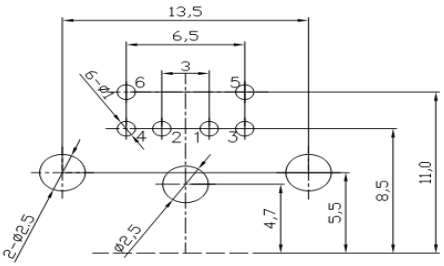

RECOMMENDED P.C.B. PATTERN LAYOUT
TOP VIEW (TOLERANCE: ±0,05)

As attached

PCN Revision History:

Date of Revision: 13.08.2012 Revision Number: 04

ASSMANN WSW components GmbH
Auf dem Schüffel 1
D-58513 Lüdenscheid
Tel.: +49-2351 - 554-0
Fax: +49-2351 - 554-99226

Product Change Notification(PCN)

Issue Date: 14.02.2011
Modification/Revision Date: 13.08.2012

Old version A-DIO-TOP/03

revised:

dimension 9.40 (old) = 9.2 (new)
dimension 1.90 (old) = 2.0 (new)
design of hole for shield pins is different:
0.70*1.30(old)= dia.1.2(new)

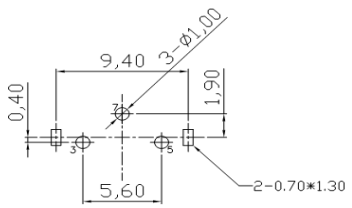

Recommended PCB Layout
[BOTTOM VIEW]

New version A-DIO-TOP/03

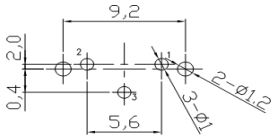

Recommended PCB Layout
Top View Tolerance(±0,05)

As attached

PCN Revision History:

Date of Revision: 13.08.2012 Revision Number: 04

ASSMANN WSW components GmbH
Auf dem Schüffel 1
D-58513 Lüdenscheid
Tel.: +49-2351 - 554-0
Fax: +49-2351 - 554-99226

Product Change Notification(PCN)

Issue Date: 14.02.2011
Modification/Revision Date: 13.08.2012

Old version A-DIO-TOP/04 / A-DIO-TOP/05

revised:

dimension 9.40 (old) = 9.2 (new)
dimension 1.6 (old) = 1.5 (new)
dimension 4.6 (old) = 4.5 (new)
dimension 0.4 (old) = 0.5 (new)
design of hole for shield pins is different:
0.70*1.30(old)= dia.1.2(new)

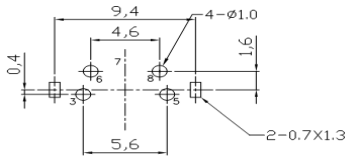

Recommended PCB Layout
[BOTTOM VIEW]

New version A-DIO-TOP/04 / A-DIO-TOP/05

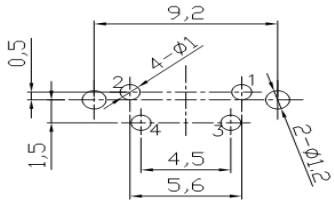

Recommended PCB Layout
Top View Tolerance(±0,05)

As attached

PCN Revision History:

Date of Revision: 13.08.2012 Revision Number: 04

ASSMANN WSW components GmbH
Auf dem Schüffel 1
D-58513 Lüdenscheid
Tel.: +49-2351 - 554-0
Fax: +49-2351 - 554-99226

Product Change Notification(PCN)

Issue Date: 14.02.2011
Modification/Revision Date: 13.08.2012

Old version A-DIO-TOP/06

revised:

dimension 9.40 (old) = 9.2 (new)
dimension 2.4 (old) = 2.7 (new)
dimension 4.6 (old) = 4.5 (new)
dimension 1.3 (old) = 1.0 (new)
design of hole for shield pins is different:
0.70*1.30(old)= dia.1.2(new)

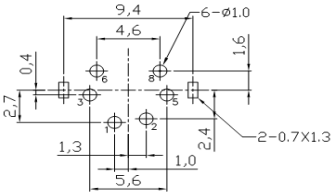

Recommended PCB Layout
[BOTTOM VIEW]

New version A-DIO-TOP/06

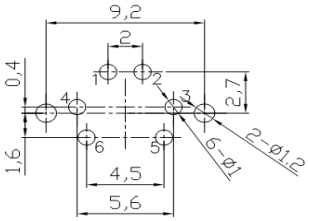

Recommended PCB Layout
Top View Tolerance(±0,05)

As attached

PCN Revision History:

Date of Revision: 13.08.2012 Revision Number: 04

ASSMANN WSW components GmbH
Auf dem Schüffel 1
D-58513 Lüdenscheid
Tel.: +49-2351 - 554-0
Fax: +49-2351 - 554-99226

Product Change Notification(PCN)

Issue Date: 14.02.2011
Modification/Revision Date: 13.08.2012

Old version A-DIO-TOP/08

revised:

dimension 9.4 (old) = 9.2 (new)
dimension 1.9 (old) = 2 (new)
dimension 4.6 (old) = 4.8 (new)
dimension 0.1 (old) = 0.5 (new)
dimension 1.3 (old) = 1.0 (new)
dimension 2.4 (old) = 2.7 (new)
design of hole for shield pins is different:
0.70*1.30(old)= dia.1.2(new)

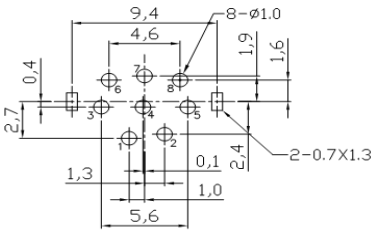

Recommended PCB Layout
[BOTTOM VIEW]

New version A-DIO-TOP/08

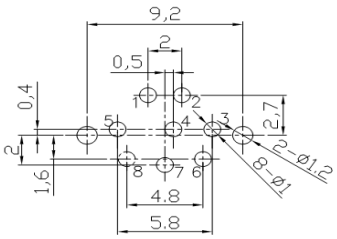

Recommended PCB Layout
Top View Tolerance(±0,05)

As attached

PCN Revision History:

Date of Revision: 13.08.2012 Revision Number: 04

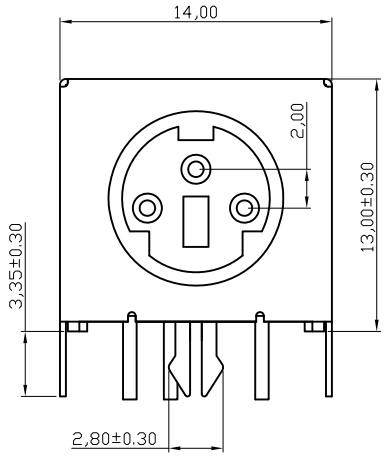

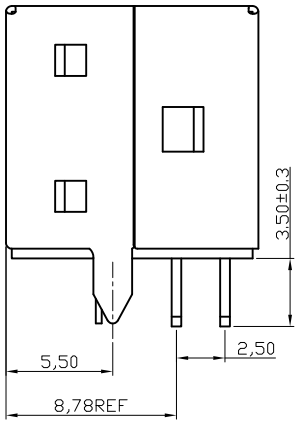

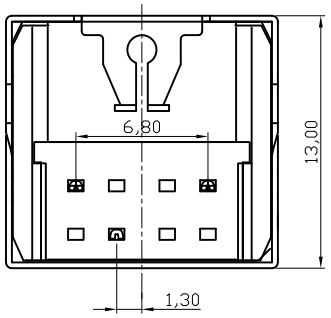

1.Material:
Contacts :Brass
Insulator :PBT+30% G.F. UL 94V-0;Black
Shell :Brass
2.Mechanical:
Mating Force: 45N max.
Withdrawal Force: 7N min.
Durability: 500 cycles min.
3.Electrical:
Current-max[amps] 1.0A
Voltage-max[volts] 30V
Withstanding Voltage 750V AC
Contact Resistance [ohms] 30 milliohms max
Insulation Resistance [ohms] 1000 Megohms min
4.Plating:
Contacts:Gold Flash Selective over Nickel
Shell: Nickel
5.Environmental
Temperature Range -55°C~+85°C

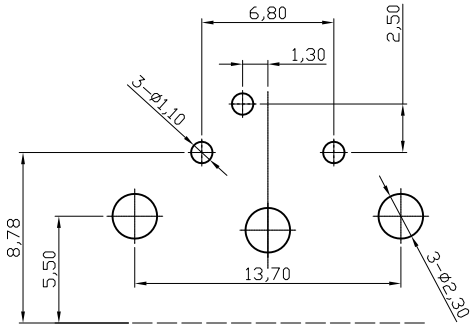

RECOMMENDED P.C.B. PATTERN LAYOUT
TOP VIEW (TOLERANCE: ±0,05)

RoHS compliant

Scale	1:1
TOLERANCE	
X.X	±0.38
X.XX	±0.25
X.XXX	±0.15
DIM	TOL
X.°	±1°
X.X°	±X°
Angle	TOL

Id.	Modification	Date	Name
③	Change the manufacture plant	25.11.2010	Alex
②	Update	15.07.2009	Rale
①	Drawn	19.03.2004	Hellwig

	Date	Name
Drawn	19.03.2004	Hellwig
Approved	25.11.2010	Gerber

ASSMANN WSW components

Customer-No.

ASSMANN WSW-No.
A-DIO-FS03

Drawing-No.
ASS 1622 CO

rev03

Replace

Sheet

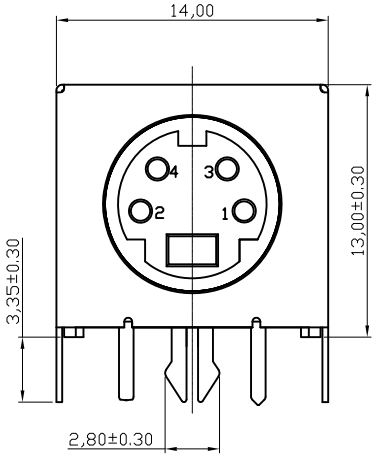

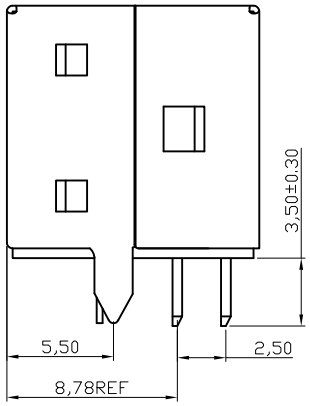

1.Material:
Contacts :Brass
Insulator :PBT+30% G.F. UL 94V-0;Black
Shell :Brass
2.Mechanical:
Mating Force: 45N max.
Withdrawal Force: 7N min.
Durability: 500 cycles min.
3.Electrical:
Current-max[amps] 1.0A
Voltage-max[volts] 30V
Withstanding Voltage 750V AC
Contact Resistance [ohms] 30 milliohms max
Insulation Resistance [ohms] 1000 Megohms min
4.Plating:
Contacts:Gold Flash Selective over Nickel
Shell:Nickel
5.Environmental
Temperature Range -55°C~+85°C

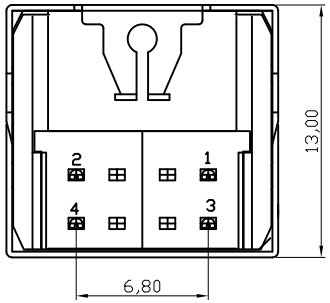

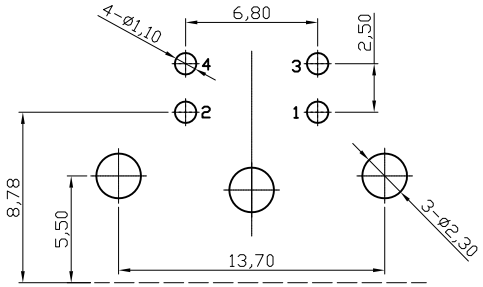

RECOMMENDED P.C.B. PATTERN LAYOUT
TOP VIEW (TOLERANCE: ±0,05)

RoHS compliant

Scale	1:1						Date	Name	Customer-No.
TOLERANCE						Drawn	06.12.2004	Hellwig	
X.X	±0.38					Approved	25.11.2010	Gerber	ASSMANN WSW-No. A-DIO-FS04
X.XX	±0.25								
X.XXX	±0.15	③	Change the manufacture plant	25.11.2010	Alex				Drawing-No. ASS 1021B CO rev03
DIM	TOL	②	Update	15.07.2009	Rale				
X.°	±1°	①	Drawn	06.12.2004	Hellwig				
X.X°	±X°								Replace Sheet
Angle	TOL	Id.	Modification	Date	Name				

ASSMANN WSW components

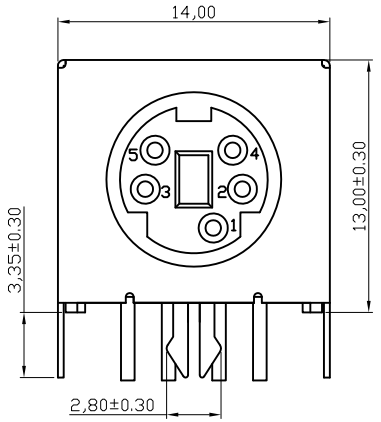

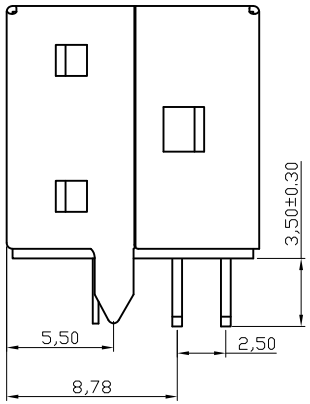

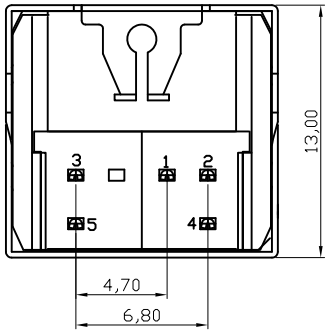

1.Material:
Contacts :Brass
Insulator :PBT+30% G.F. UL 94V-0;Black
Shell :Brass
2.Mechanical:
Mating Force: 45N max.
Withdrawal Force: 7N min.
Durability: 500 cycles min.
3.Electrical:
Current-max[amps] 1.0A
Voltage-max[volts] 30V
Withstanding Voltage 750V AC
Contact Resistance [ohms] 30 milliohms max
Insulation Resistance [ohms] 1000 Megohms min
4.Plating:
Contacts:Gold Flash Selective over Nickel
Shell:Nickel
5.Environmental
Temperature Range -55°C~+85°C

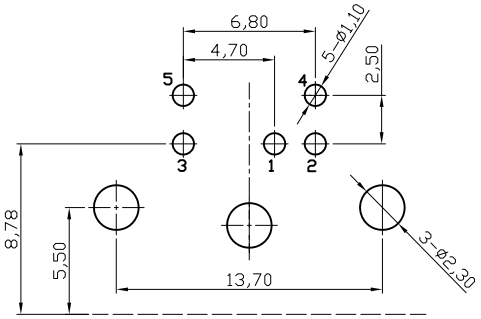

RECOMMENDED P.C.B. PATTERN LAYOUT
TOP VIEW (TOLERANCE: ±0,05)

RoHS compliant

Scale	1:1						Date	Name
TOLERANCE						Drawn	15.07.2009	Rale
X.X	±0.38					Approved	25.11.2010	Gerber
X.XX	±0.25							
X.XXX	±0.15							
DIM	TOL	②	Change the manufacture plant	25.11.2010	Alex			
X.°	±1°	①	Drawn	15.07.2009	Rale			
X.X°	±X°							
Angle	TOL	Id.	Modification	Date	Name			

Customer-No.

ASSMANN WSW-No.
A-DIO-FS05

Drawing-No.
ASS 1021A CO

rev02

Replace

Sheet

ASSMANN WSW components

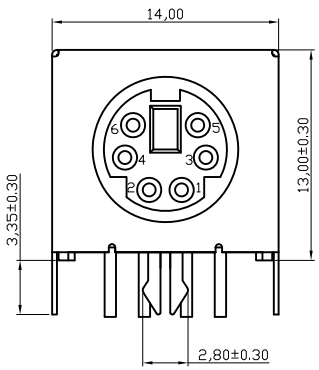

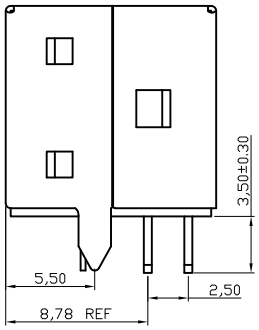

1.Material:
Contacts :Brass
Insulator:PBT+30%G.F UL94V-0,Black
Shell : Brass
2.Mechanical:
Mating Force:45N max.
Withdrawal Force:7N min.
Durability:500 cycles min.
3.Electrical:
Current-max[amps] 1.0A
Voltage-max[volts] 30V
Withstanding Voltage 750V AC
Contact Resistance [ohms] 30 milliohms max
Insulation Resistance [ohms] 1000 Megohms min
4.Plating:
Contacts: Gold Flash Selective over Nickel
Shell:Nickel
5.Environmental
Temperature Range -55°C~+85°C

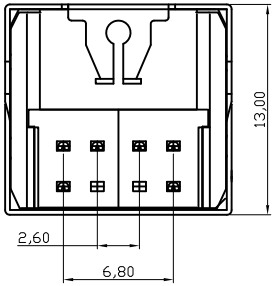

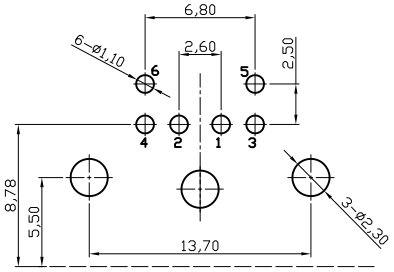

RECOMMENDED P.C.B. PATTERN LAYOUT
TOP VIEW (TOLERANCE: ±0,05)

RoHS compliant

Scale	1:1						Date	Name
TOLERANCE						Drawn	06.12.2004	Hellwig
X.X	±X					Approved	25.11.2010	Gerber
X.XX	±X							
X.XXX	±X	③	Change the manufacture plant	25.11.2010	Alex			
DIM	TOL	②	Update	15.07.2009	Rale			
X.°	±X°	①	Drawn	06.12.2004	Hellwig			
X.X°	±X°							
Angle	TOL	Id.	Modification	Date	Name			

Customer-No.

ASSMANN WSW-No.
A-DIO-FS06

Drawing-No.
ASS 1021 CO

rev03

Replace

Sheet

ASSMANN WSW components

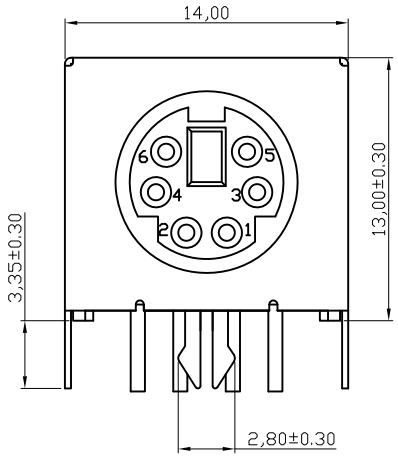

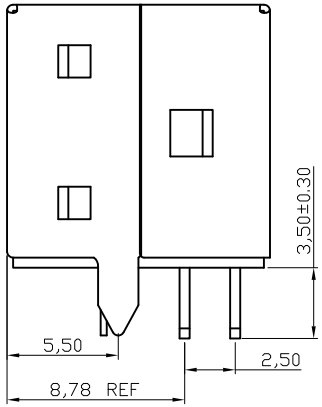

1.Material:
Contacts :Brass
Insulator:PBT+30%G.F UL94V-0
Shell : Brass
2.Mechanical:
Mating Force:45N max.
Withdrawal Force:7N min.
Durability:500 cycles min.
3.Electrical:
Current-max[amps] 1.0A
Voltage-max[volts] 30V
Withstanding Voltage 750V AC
Contact Resistance [ohms] 30 milliohms max
Insulation Resistance [ohms] 1000 Megohms min
4.Plating:
Contacts: Gold Flash Selective over Nickel
Shell:Nickel
5.Environmental
Temperature Range -55°C~+85°C

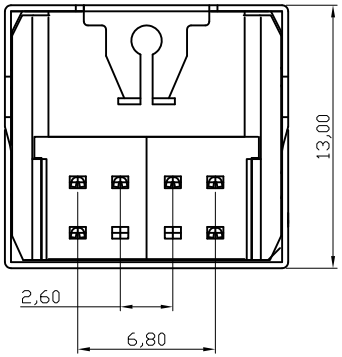

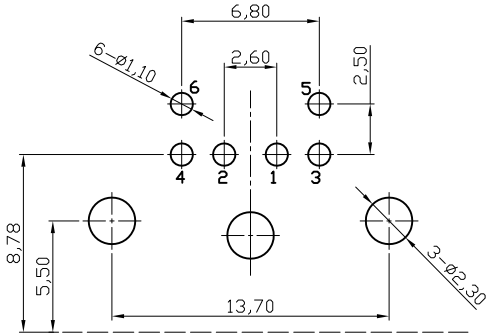

RECOMMENDED P.C.B. PATTERN LAYOUT
TOP VIEW (TOLERANCE: ±0,05)

ASSMANN WSW P/N	HOUSING COLOR
A-DIO-FS06/GREEN	GREEN
A-DIO-FS06/PURPLE	PURPLE

RoHS compliant

Scale	1:1
TOLERANCE	
X.X	±0.38
X.XX	±0.25
X.XXX	±0.15
DIM	TOL
X.°	±1°
X.X°	±X°
Angle	TOL

Id.	Modification	Date	Name
②	Change the manufacture plant	25.11.2010	Alex
①	Drawn	15.07.2009	Rale

	Date	Name
Drawn	15.07.2009	Rale
Approved	25.11.2010	Gerber

ASSMANN WSW components

Customer-No.

ASSMANN WSW-No. A-DIO-FS06/GREEN
A-DIO-FS06/PURPLE

Drawing-No. ASS 3567 CO

rev02

Replace

Sheet

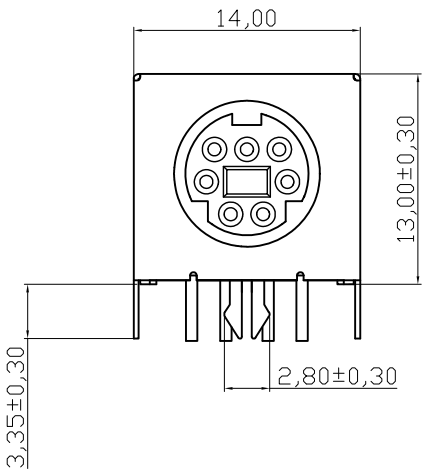

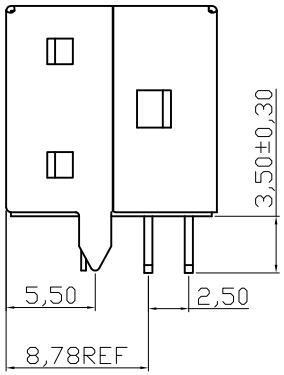

1.Material:
Contacts :Brass
Insulator :PBT+30% G.F. UL 94V-0;Black
Shell :Brass
2.Mechanical:
Mating Force: 45N max.
Withdrawal Force: 7N min.
Durability: 500 cycles min.
3.Electrical:
Current-max[amps] 1.0A
Voltage-max[volts] 30V
Withstanding Voltage 750V AC
Contact Resistance [ohms] 30 milliohms max
Insulation Resistance [ohms] 1000 Megohms min
4.Plating:
Contacts:Gold Flash Selective over Nickel
Shell: Nickel
5.Environmental
Temperature Range -55°C~+85°C

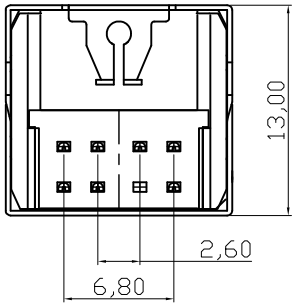

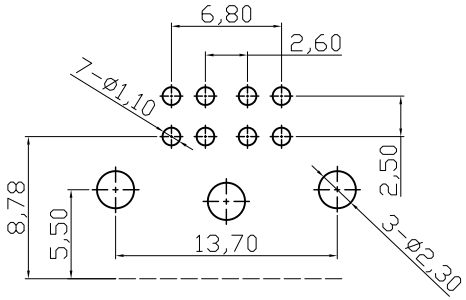

RECOMMENDED P.C.B. PATTERN LAYOUT
TOP VIEW (TOLERANCE: ±0,05)

RoHS compliant

Scale	1:1
TOLERANCE	
X.X	±0.38
X.XX	±0.25
X.XXX	±0.15
DIM	TOL
X.°	±1°
X.X°	±X°
Angle	TOL

Id.	Modification	Date	Name
②	Change the manufacture plant	25.11.2010	Alex
①	Drawn	15.07.2009	Rale

	Date	Name
Drawn	15.07.2009	Rale
Approved	25.11.2010	Gerber

ASSMANN WSW components

Customer-No.

ASSMANN WSW-No. A-DIO-FS07

Drawing-No. ASS 3565 CO

rev02

Replace

Sheet

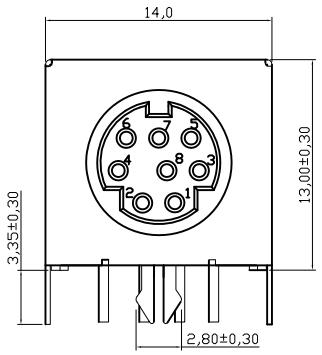

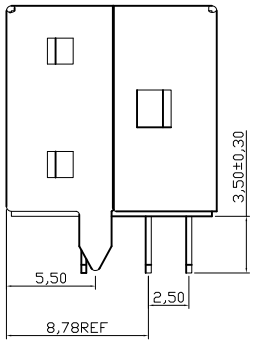

1.Material:
Contacts :Brass
Insulator :PBT+30% G.F. UL 94V-0;Black
Shell :Brass
2.Mechanical:
Mating Force: 45N max.
Withdrawal Force: 7N min.
Durability: 500 cycles min.
3.Electrical:
Current-max[amps] 1.0A
Voltage-max[volts] 30V
Withstanding Voltage 750V AC
Contact Resistance [ohms] 30 milliohms max
Insulation Resistance [ohms] 1000 Megohms min
4.Plating:
Contacts:Gold Flash Selective over Nickel
Shell: Nickel
5.Environmental
Temperature Range -55°C~+85°C

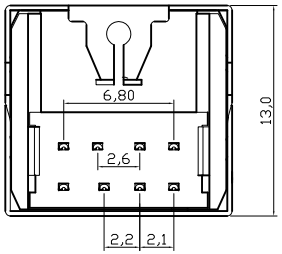

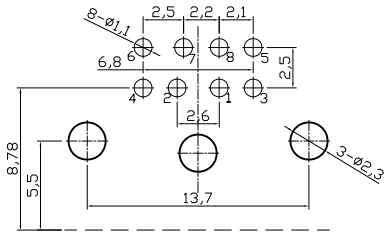

RECOMMENDED P.C.B. PATTERN LAYOUT
TOP VIEW (TOLERANCE: ±0,05)

RoHS compliant

Scale	1:1						Date	Name
TOLERANCE						Drawn	15.07.2009	Rale
X.X	±0.38					Approved	25.11.2010	Gerber
X.XX	±0.25							
X.XXX	±0.15							
DIM	TOL	②	Change the manufacture plant	25.11.2010	Alex			
X.°	±1°	①	Drawn	15.07.2009	Rale			
X.X°	±X°							
Angle	TOL	Id.	Modification	Date	Name			

Customer-No.

ASSMANN WSW-No.
A-DIO-FS08

Drawing-No.
ASS 3563 CO

rev02

Replace

Sheet

ASSMANN WSW components

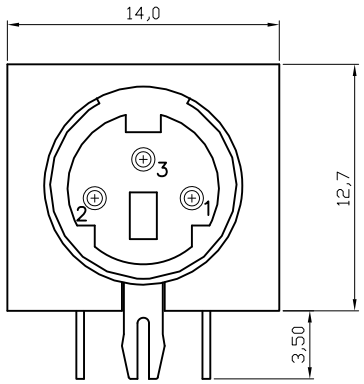

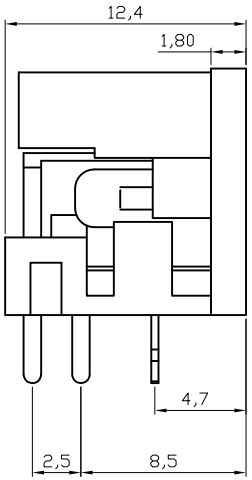

1.Material:
Contacts :Brass
Housing: PBT+30% G.F. UL 94V-0;Black

2.Electrical:
Current-max[amps] 0.3AMP DC30V
Withstanding Voltage 1000V AC MIN.
Contact Resistance [ohms] 30 milliohms max
Insulation Resistance [ohms] 100 Megohms min

3.Plating:
Contacts: Full gold flash

4.Environmental
Temperature Range -25°C~+85°C

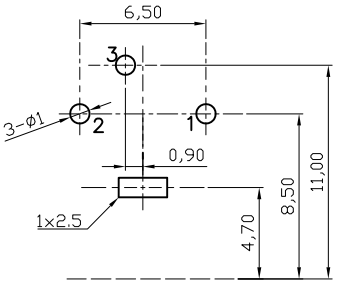

Recommended PCB Layout
Top View Tolerance(±0,05)

RoHS compliant

Scale	1:1						Date	Name	Customer-No.
TOLERANCE						Drawn	13.03.2008	N.Schulz	
X.X	±0.38					Approved	25.11.2010	Gerber	ASSMANN WSW-No. A-DIO-M03
X.XX	±0.25								
X.XXX	±0.15	③	Change the manufacture plant	25.11.2010	Alex				Drawing-No. ASS 2542 CO rev03
DIM	TOL	②	Update	15.07.2009	Rale				
X.°	±1°	①	Drawn	13.03.2008	N.Schulz				
X.X°	±X°								Replace / Sheet
Angle	TOL	Id.	Modification	Date	Name				

ASSMANN WSW components

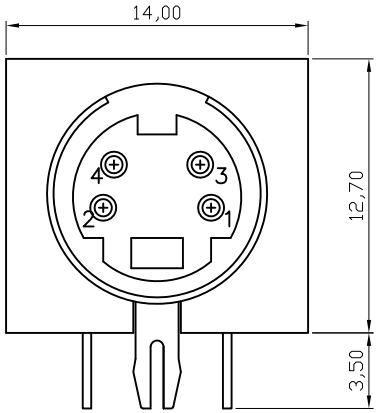

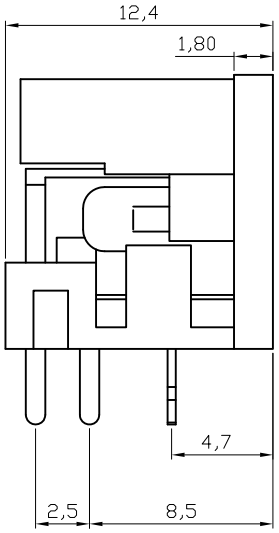

1.Material:
Contacts :Brass
Housing: PBT+30% G.F. UL 94V-0;Black

2.Electrical:
Current-max[amps] 0.3AMP DC30V
Withstanding Voltage 1000V AC MIN.
Contact Resistance [ohms] 30 milliohms max
Insulation Resistance [ohms] 100 Megohms min

3.Plating:
Contacts: Full gold flash

4.Environmental
Temperature Range -25°C~+85°C

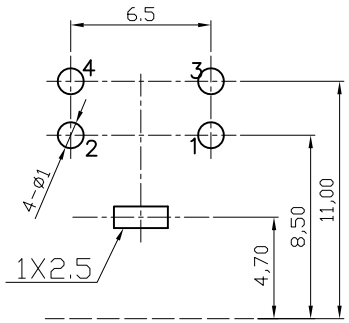

Recommended PCB Layout
Top View Tolerance(±0,05)

RoHS compliant

Scale	1:1						Date	Name	Customer-No.
TOLERANCE						Drawn	02.08.2006	Hellwig	
X.X	±0.38					Approved	25.11.2010	Gerber	ASSMANN WSW-No. A-DIO-M04
X.XX	±0.25								
X.XXX	±0.15	③	Change the manufacture plant	25.11.2010	Alex				Drawing-No. ASS 0504 CO rev03
DIM	TOL	②	Update	15.07.2009	Rale				
X.°	±1°	①	Drawn	02.08.2006	Hellwig				
X.X°	±X°								Replace / Sheet
Angle	TOL	Id.	Modification	Date	Name				

ASSMANN WSW components

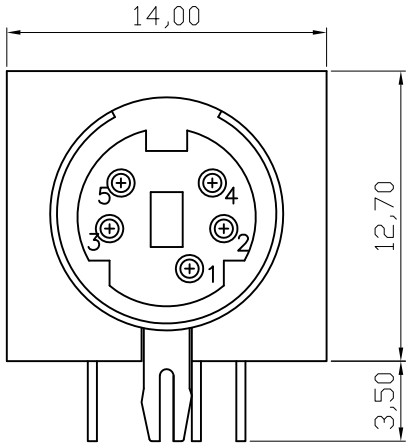

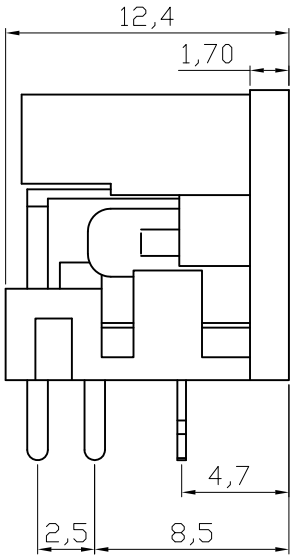

1.Material:
Contacts :Brass
Housing: PBT+30% G.F. UL 94V-0;Black

2.Electrical:
Current-max[amps] 0.3AMP DC30V
Withstanding Voltage 1000V AC MIN.
Contact Resistance [ohms] 30 milliohms max
Insulation Resistance [ohms] 100 Megohms min

3.Plating:
Contacts: Full gold flash

4.Environmental
Temperature Range -25°C~+85°C

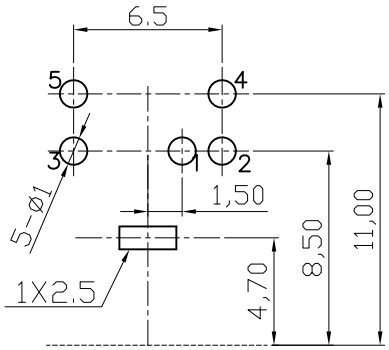

Recommended PCB Layout
Top View Tolerance(±0,05)

RoHS compliant

Scale	1:1						Date	Name
TOLERANCE						Drawn	15.07.2009	Rale
X.X	±0.38					Approved	25.11.2010	Gerber
X.XX	±0.25							
X.XXX	±0.15							
DIM	TOL	②	Change the manufacture plant	25.11.2010	Alex			
X.°	±1°	①	Drawn	15.07.2009	Rale			
X.X°	±X°							
Angle	TOL	Id.	Modification	Date	Name			

ASSMANN WSW components

Customer-No.

ASSMANN WSW-No.
A-DIO-M05

Drawing-No.
ASS 3564 CO

rev02

Replace

Sheet

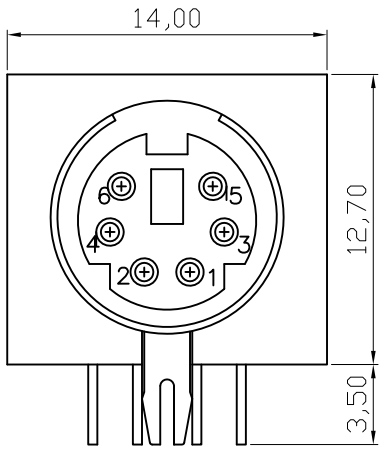

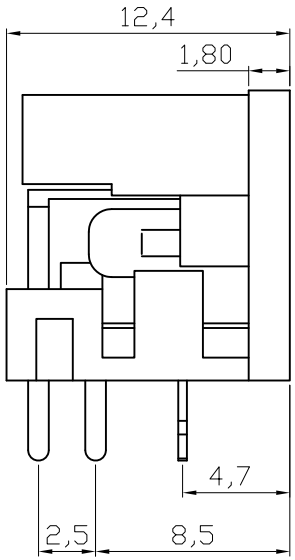

1.Material:
Contacts :Brass
Housing: PBT+30% G.F. UL 94V-0;Black

2.Electrical:
Current-max[amps] 0.3AMP DC30V
Withstanding Voltage 1000V AC MIN.
Contact Resistance [ohms] 30 milliohms max
Insulation Resistance [ohms] 100 Megohms min

3.Plating:
Contacts: Full gold flash

4.Environmental
Temperature Range -25°C~+85°C

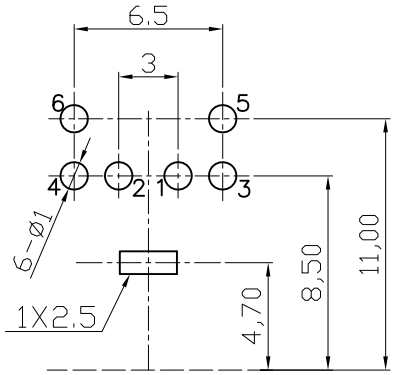

Recommended PCB Layout
Top View Tolerance(±0,05)

RoHS compliant

Scale	1:1
TOLERANCE	
X.X	±0.38
X.XX	±0.25
X.XXX	±0.15
DIM	TOL
X.°	±1°
X.X°	±X°
Angle	TOL

Id.	Modification	Date	Name
②	Change the manufacture plant	25.11.2010	Alex
①	Drawn	15.07.2009	Rale

	Date	Name
Drawn	15.07.2009	Rale
Approved	25.11.2010	Gerber

ASSMANN WSW components

Customer-No.

ASSMANN WSW-No.
A-DIO-M06

Drawing-No.
ASS 1038 CO

rev02

Replace

Sheet

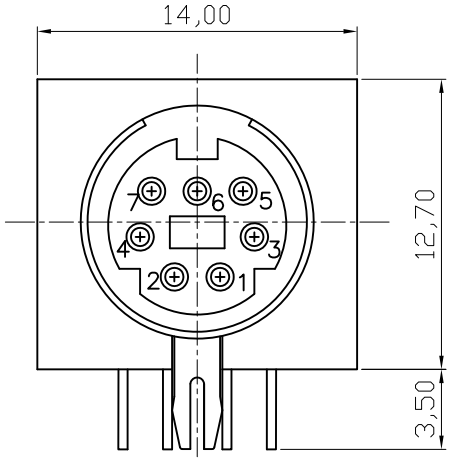

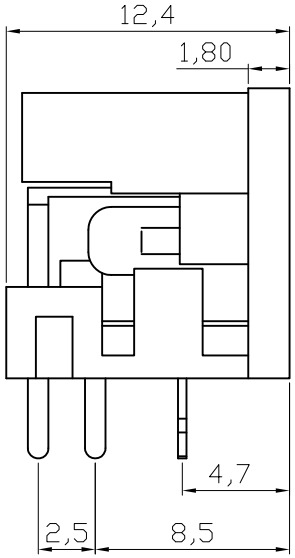

1.Material:
Contacts :Brass
Housing: PBT+30% G.F. UL 94V-0;Black

2.Electrical:
Current-max[amps] 0.3AMP DC30V
Withstanding Voltage 1000V AC MIN.
Contact Resistance [ohms] 30 milliohms max
Insulation Resistance [ohms] 100 Megohms min

3.Plating:
Contacts: Full gold flash

4.Environmental
Temperature Range -25°C~+85°C

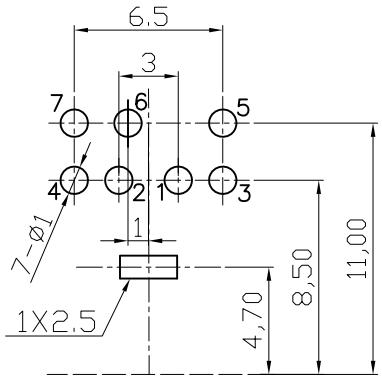

Recommended PCB Layout
Top View Tolerance(±0,05)

RoHS compliant

Scale	1:1
TOLERANCE	
X.X	±0.38
X.XX	±0.25
X.XXX	±0.15
DIM	TOL
X.°	±1°
X.X°	±X°
Angle	TOL

Id.	Modification	Date	Name
②	Change the manufacture plant	25.11.2010	Alex
①	Drawn	15.07.2009	Rale

	Date	Name
Drawn	15.07.2009	Rale
Approved	25.11.2010	Gerber

ASSMANN WSW components

Customer-No.

ASSMANN WSW-No.
A-DIO-M07

Drawing-No.
ASS 3566 CO

rev02

Replace

Sheet

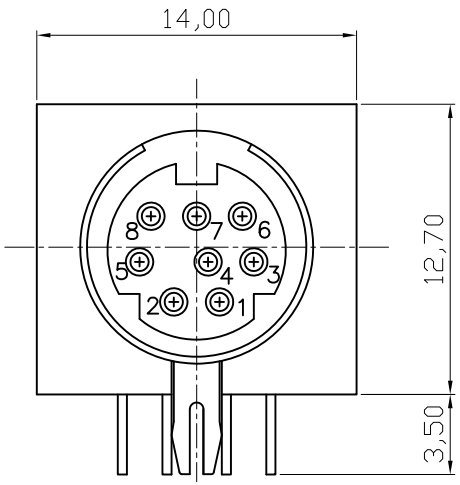

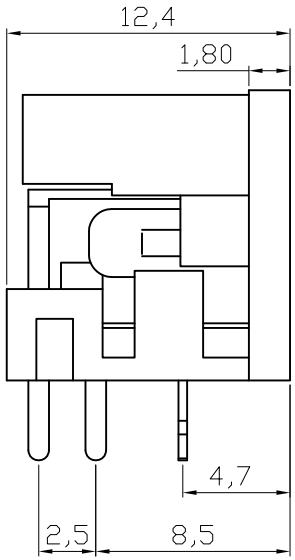

1.Material:
Contacts :Brass
Housing: PBT+30% G.F. UL 94V-0;Black

2.Electrical:
Current-max[amps] 0.3AMP DC30V
Withstanding Voltage 1000V AC MIN.
Contact Resistance [ohms] 30 milliohms max
Insulation Resistance [ohms] 100 Megohms min

3.Plating:
Contacts: Full gold flash

4.Environmental
Temperature Range -25°C~+85°C

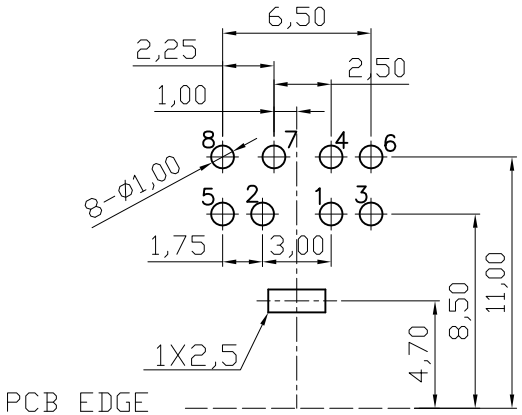

Recommended PCB Layout
Top View Tolerance(±0,05)

RoHS compliant

Scale	1:1					Date	Name	Customer-No.
TOLERANCE					Drawn	06.12.2006	Hellwig	
X.X	±0.38							
X.XX	±0.25	④	Modify the PCB layout	21.04.2011	Rale	Approved	21.04.2011	Hellwig
X.XXX	±0.15	③	Change the manufacture plant	25.11.2010	Alex			
DIM	TOL	②	Update	15.07.2009	Rale			
X.°	±1°							
X.X°	±X°	①	Drawn	06.12.2006	Hellwig			
Angle	TOL	Id.	Modification	Date	Name			

ASSMANN WSW-No. A-DIO-M08

Drawing-No. ASS 1012 CO

rev04

Replace

Sheet

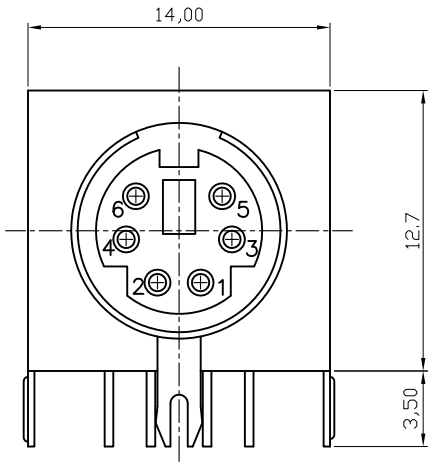

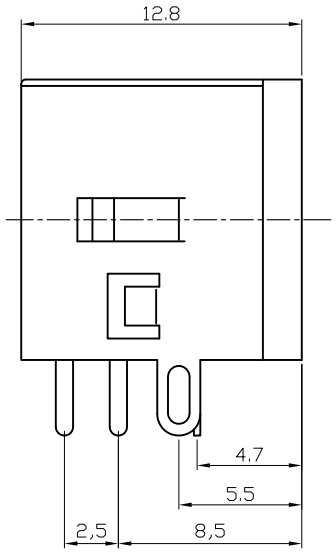

1.Material:
Contacts :Brass
Insulator :PBT+30% G.F. UL 94V-0;Black
Shell :Brass
2.Mechanical:
Mating Force: 45N max.
Withdrawal Force: 7N min.
Durability: 500 cycles min.
3.Electrical:
Current-max[amps] 1.0A
Voltage-max[volts] 30V
Withstanding Voltage 750V AC
Contact Resistance [ohms] 30 milliohms max
Insulation Resistance [ohms] 1000 Megohms min
4.Plating:
Contacts:Gold Flash Selective over Nickel
Shell: Nickel
5.Environmental
Temperature Range -55°C~+85°C

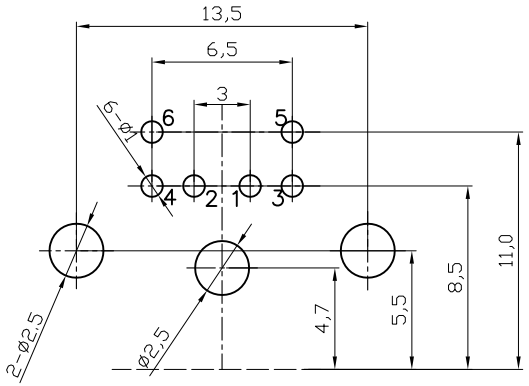

RECOMMENDED P.C.B. PATTERN LAYOUT
TOP VIEW (TOLERANCE: ±0,05)

RoHS compliant

Scale	1:1					Date	Name	Customer-No.
TOLERANCE					Drawn	20.10.2000	Hellwig	
X.X	±0.38				Approved	25.11.2010	Hellwig	ASSMANN WSW-No. A-DIO-PS06
X.XX	±0.25							
X.XXX	±0.15	③	Change the manufacture plant	25.11.2010	Alex			Drawing-No. ASS 1047 CO rev03
DIM	TOL	②	Update	03.03.2009	Dean			
X.°	±1°	①	Drawn	20.10.2000	Hellwig			
X.X°								Replace Sheet
Angle	TOL	Id.	Modification	Date	Name			

ASSMANN WSW components

SV1388

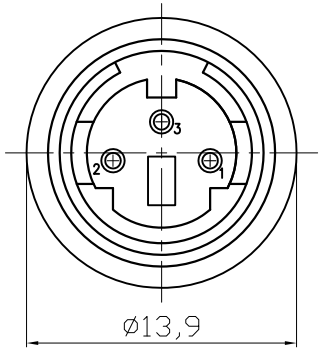

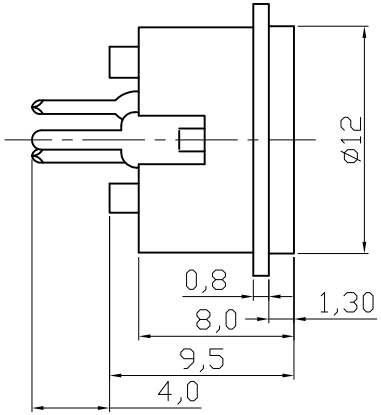

1.Material:
Contacts: Brass
Insulator:PBT+30%G.F UL 94V-0
Shell: Brass
2.Mechanical:
Mating Force:45N max.
Withdrawal Force:7N min.
Durability:500 cycles min.
3.Electrical:
Current-max[amps]0.3A
voltage-max[volts]30V
Withstanding Voltage 1000V AC
Contact Resistance[ohms] 30 milliohms max
Insulation Resistance[ohms]1000 Megohms min
4.Plating:
Contacts:Full Gold Flash
5.Environmental
Temperature Range -25℃~ +85℃

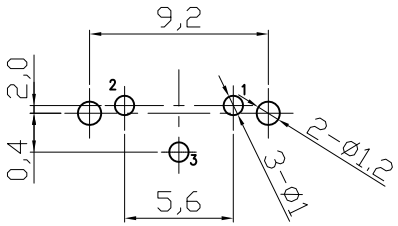

Recommended PCB Layout
Top View Tolerance(±0,05)

RoHS compliant

Scale	1:1						Date	Name
TOLERANCE						Drawn	15.07.2009	Rale
X.X	±0.38					Approved	16.12.2010	Gerber
X.XX	±0.25							
X.XXX	±0.15							
DIM	TOL	②	Change the manufacture plant	16.12.2010	Rale			
X.°	±1°	①	Drawn	15.07.2009	Rale			
X.X°	±X°							
Angle	TOL	Id.	Modification	Date	Name			

Customer-No.

ASSMANN WSW-No.
A-DIO-TOP/03

Drawing-No.
ASS 1010C CO

rev02

Replace

Sheet

ASSMANN WSW components

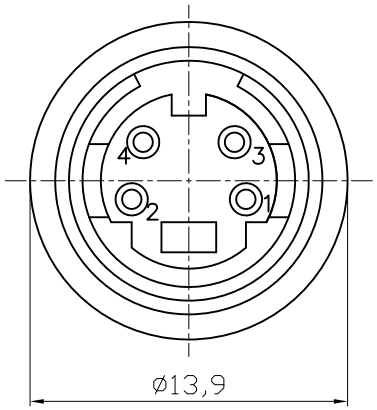

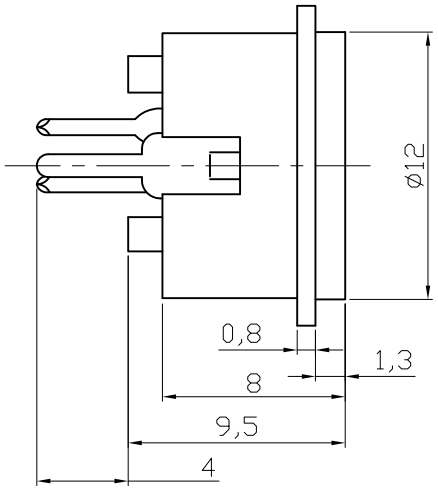

1.Material:
Contacts: Brass
Insulator:PBT+30%G.F UL 94V-0
Shell: Brass
2.Mechanical:
Mating Force:45N max.
Withdrawal Force:7N min.
Durability:500 cycles min.
3.Electrical:
Current-max[amps]0.3A
voltage-max[volts]30V
Withstanding Voltage 1000V AC
Contact Resistance[ohms] 30 milliohms max
Insulation Resistance[ohms]1000 Megohms min
4.Plating:
Contacts:Full Gold Flash
5.Environmental
Temperature Range -25℃~ +85℃

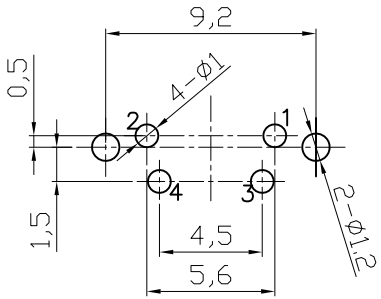

Recommended PCB Layout
Top View Tolerance(±0,05)

RoHS compliant

Scale	1:1
TOLERANCE	
X.X	±0.38
X.XX	±0.25
X.XXX	±0.15
DIM	TOL
X.°	±1°
X.X°	±X°
Angle	TOL

Id.	Modification	Date	Name
③	Change the manufacture plant	25.11.2010	Alex
②	Update	15.07.2009	Rale
①	Drawn	27.02.2002	Hellwig

	Date	Name
Drawn	27.02.2002	Hellwig
Approved	25.11.2010	Gerber

Customer-No.

ASSMANN WSW-No.
A-DIO-TOP/04

Drawing-No.
ASS 1010 CO

rev03

Replace

Sheet

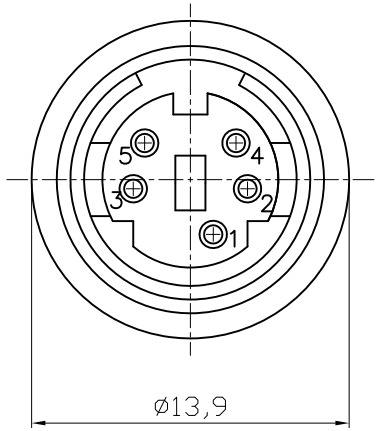

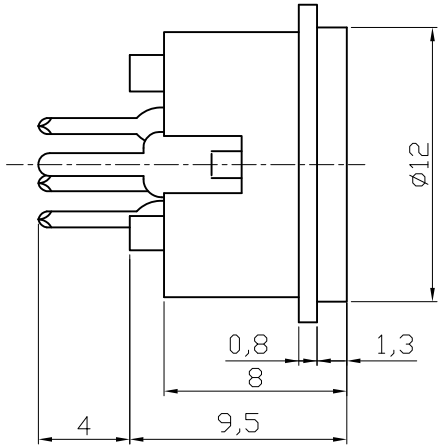

1.Material:
Contacts: Brass
Insulator:PBT+30%G.F UL 94V-0
Shell: Brass
2.Mechanical:
Mating Force:45N max.
Withdrawal Force:7N min.
Durability:500 cycles min.
3.Electrical:
Current-max[amps]0.3A
voltage-max[volts]30V
Withstanding Voltage 1000V AC
Contact Resistance[ohms] 30 milliohms max
Insulation Resistance[ohms]1000 Megohms min
4.Plating:
Contacts:Full Gold Flash
5.Environmental
Temperature Range -25℃~ +85℃

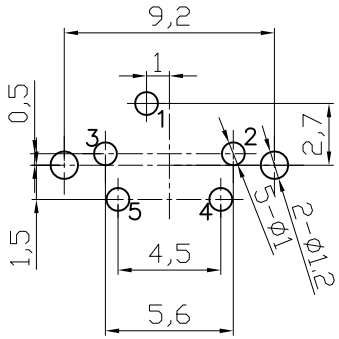

Recommended PCB Layout
Top View Tolerance(±0,05)

RoHS compliant

Scale	1:1						Date	Name	Customer-No.
TOLERANCE						Drawn	15.07.2009	Rale	
X.X	±0.38					Approved	25.11.2010	Gerber	ASSMANN WSW-No. A-DIO-TOP/05
X.XX	±0.25								
X.XXX	±0.15								Drawing-No. ASS 1010B CO rev02
DIM	TOL	②	Change the manufacture plant	25.11.2010	Alex				
X.°	±1°								
X.X°	±X°	①	Drawn	15.07.2009	Rale				
Angle	TOL	Id.	Modification	Date	Name				Replace / Sheet

ASSMANN WSW components

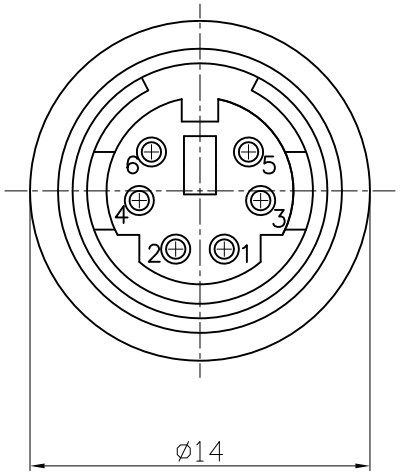

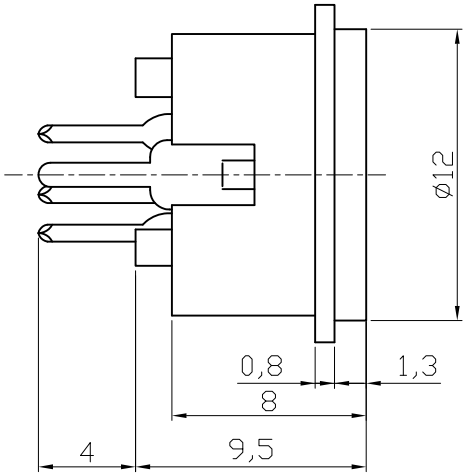

1.Material:
Contacts: Brass
Insulator:PBT+30%G.F UL 94V-0
Shell: Brass
2.Mechanical:
Mating Force:45N max.
Withdrawal Force:7N min.
Durability:500 cycles min.
3.Electrical:
Current-max[amps]0.3A
voltage-max[volts]30V
Withstanding Voltage 1000V AC
Contact Resistance[ohms] 30 milliohms max
Insulation Resistance[ohms]1000 Megohms min
4.Plating:
Contacts:Full Gold Flash
5.Environmental
Temperature Range -25℃~ +85℃

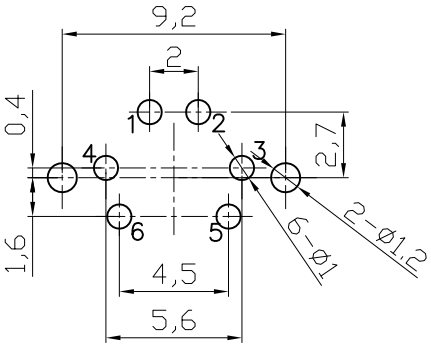

Recommended PCB Layout
Top View Tolerance(±0,05)

RoHS compliant

Scale	1:1
TOLERANCE	
X.X	±0.38
X.XX	±0.25
X.XXX	±0.15
DIM	TOL
X.°	±1°
X.X°	±X°
Angle	TOL

Id.	Modification	Date	Name
④	Change the manufacture plant	25.11.2010	Alex
③	Add UL No. for PBT	15.04.2010	Dean
②	Update	15.07.2009	Rale
①	Drawn	27.02.2002	Hellwig

	Date	Name
Drawn	27.02.2002	Hellwig
Approved	25.11.2010	Gerber

Customer-No.

ASSMANN WSW-No. A-DIO-TOP/06

Drawing-No. ASS 1010A CO

rev04

Replace

Sheet

ASSMANN WSW components

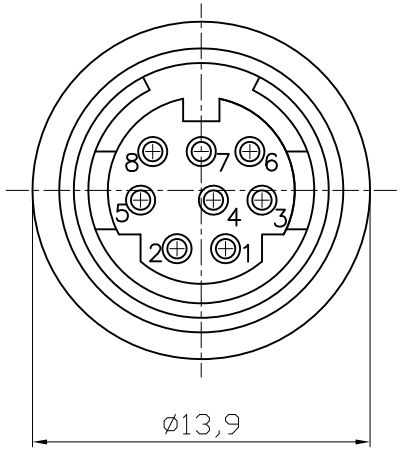

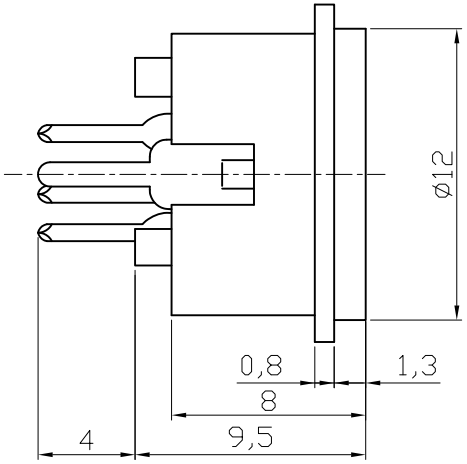

1.Material:
Contacts: Brass
Insulator:PBT+30%G.F UL 94V-0
Shell: Brass
2.Mechanical:
Mating Force:45N max.
Withdrawal Force:7N min.
Durability:500 cycles min.
3.Electrical:
Current-max[amps]0.3A
voltage-max[volts]30V
Withstanding Voltage 1000V AC
Contact Resistance[ohms] 30 milliohms max
Insulation Resistance[ohms]1000 Megohms min
4.Plating:
Contacts:Full Gold Flash
5.Environmental
Temperature Range -25℃~ +85℃

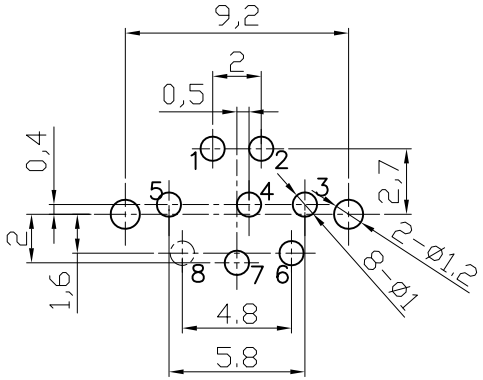

Recommended PCB Layout
Top View Tolerance(±0,05)

RoHS compliant

Scale	1:1
TOLERANCE	
X.X	±0.38
X.XX	±0.25
X.XXX	±0.15
DIM	TOL
X.°	±1°
X.X°	±X°
Angle	TOL

Id.	Modification	Date	Name
⑤	Change the manufacture plant	25.11.2010	Alex
④	Update	15.07.2009	Rale
③	Tolerance added	20.08.2003	A.Menk
②	Completed Spec.	11.07.2003	Hellwig
①	Drawn	10.06.2002	A.Menk

	Date	Name
Drawn	10.06.2002	A.Menk
Approved	25.11.2010	Gerber

ASSMANN WSW components

Customer-No.

ASSMANN WSW-No.
A-DIO-TOP/08

Drawing-No.
ASS 1294 CO

rev05

Replace

Sheet