LCD-GRAPHIC MODULE
240x128 WITH CONTROLLER

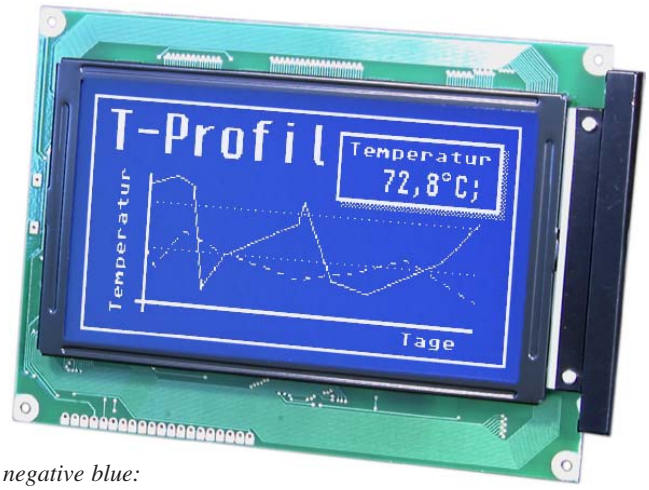

negative blue:
EA W240-7KHC bzw.
EA W240-7KHLW

Optional Touch Panel

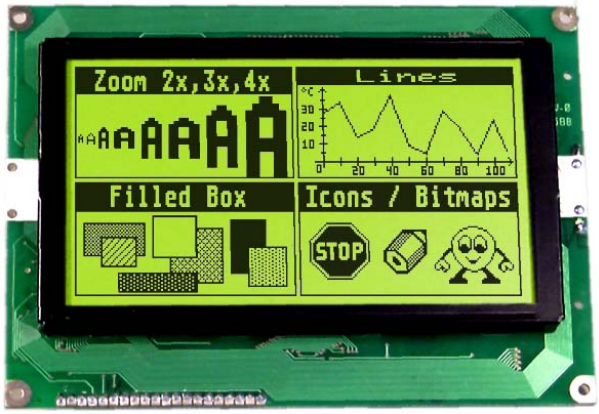

yellow-green:
EA W240-7KHLEDB

FEATURES

* HIGH CONTRAST SUPERTWIST DISPLAY
* AVAILABLE WITH AND WITHOUT TOUCH PANEL
* CONTROLLER T6963C BUILT-IN
* CONNECTION VIA 8-BIT DATA BUS
* BULIT-IN CHARACTER SET
* COMBINE TEXT AND GRAPHIC ELEMENTS
* SELF DEFINABLE CHARACTERS
* POWER SUPPLY +5V only, typ. 50mA (W./O. BACKLIGHT)
* OPERATING TEMPERATURE -20 ... +70°C
* TEMPERATURE COMPENSATION ON-BOARD

ACCESSORIES

* HIGH-LEVEL-G. CONTROLLER, 3 FONTS + GRAPH.FCT. **EA IC6963-PGH**
* READY TO USE UNIT WITH RS-232: **EA KIT240-7xxx**

ORDERING INFORMATION

LCD GRAPHIC MODULE 240x128 DOTS WITH LED-B./L.	**EA W240-7KHLEDB**
NEGATIVE BLUE WITH CFL-B./L.	**EA W240-7KHC**
NEGATIVE BLUE WITH LED-B./L. WHITE	**EA W240-7KHLW**
WITH TOUCH PANEL AND LED-B./L.	**EA W240-7KHLEDTP**
WITH TOUCH PANEL, NEGATIVE BLUE, CFL-B./L.	**EA W240-7KHCTP**
WITH TOUCH PANEL, NEGATIVE BLUE, LED-B./L.	**EA W240-7KHLWTP**

ELECTRONIC ASSEMBLY
making things easy
Lochhamer Schlag 17 · D-82166 Graefelfing · Phone +49-(0)89-8541991 · Fax +49-(0)89-8541721 · www.lcd-module.de · info@lcd-module.de

LC-DISPLAY SERIES EA W240-7K

These graphic displays provide a resolution of 240x128 dots. All of them are featured with high contrast STN technology. 3 different backlights are available:

- **EA W240-7KHLEDB** is featured with yellow/green LED backlight. That means that displays do have black characters on yellow/green illuminated background. Power consumption for backlight is typ. 900mA at forward voltage of typ. 4.1V. A current limiting resistor i necessary in any case (e.g. at 5V: R = (5V-4.1V) / 700mA = 1.3 Ω). Maximum current for backlight is 2000mA (note: heavy heat will occur). Life time of LED backlight is 100,000 hours, operating temperature range is -20..+70°C (built-in temperature compensation).
- **EA W240-7KHC** is featured with CFL backlight. That means that displays do have white characters on blue background (negative mode). Operating the CFL backlight requires a CFL inverter **EA CXA-E005W**. Power consumption for backlight is about 300mA@5V. Life time of backlight depends on application with 10,000 up to 30,000 hours. Operating temperature range is -20..+70°C (built-in temperature compensation).
- **EA W240-7KHLW** is also negative blue and is featured with a white LED backlight. This kind of backlight requires a current source or limiting resistor for operation. Current consumption is with max. 135mA (@25°C) and 3.0..3.6V extreme low. Operating temperature range is -20..+70°C, featured with built-in temperature compensation. For temperatures above +25°C do not forget to design in a derating for current.

BUILT-IN CONTROLLER T6963 C

All modules come with controller T 6963C. It is good for direct connection to 8 bit microprocessor system and contains a comfortable command set. There is for example a character set already built-in, which can be extended or redefined in complete. Each character can be attributed with e.g. "invers", "blink" or "invisible".
Iin graphic mode on-board display RAM (32kB) provides up to 8 full-screen pages. Text and graphic layer can be displays via "and-", "or-", "exor-" function..

CONNECTION

A 1-row pin header can be soldered into 2.54mm eyelet strip.

Touch Panel

All versions are availble with and without touch panel as a standard. Construction is a resistive matrix type. It can be operated with blank finger or stick. Surface is hardened and anti-reflex. resolution is 10x6 fields.

Contrast adjustment

Pin 17 is an output with its -16..-18V. Via external potentiometer contrast can be adjusted then.

Pin	Symbol	Function
1	GND	Ground Potential for logic (0V)
2	VDD	Power supply for logic (+5V)
3	VADJ	Operating voltage for LC driving (input)
4	C/D	L: Data input H: Command input
5	RD	L: Data Read
6	WR	L: Data Write
7..14	DB0..7	Data Bus Line
15	CE	Enable signal (falling edge)
16	RST	L: Reset
17	VO	Output voltage for LC driving (ca. -16V)
18	MD2	Textmode L: 40 columns H: 32 columns
19	FS	Font Select L: 8x8 Font+Graphic H: 6x8 Font
20	NC	Do not connect

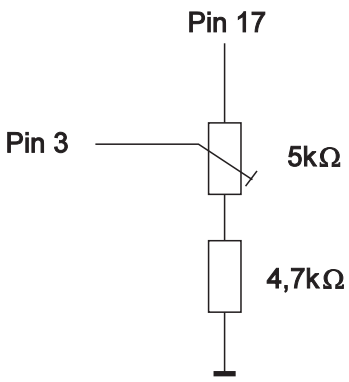

DIMENSION

without Touch Panel

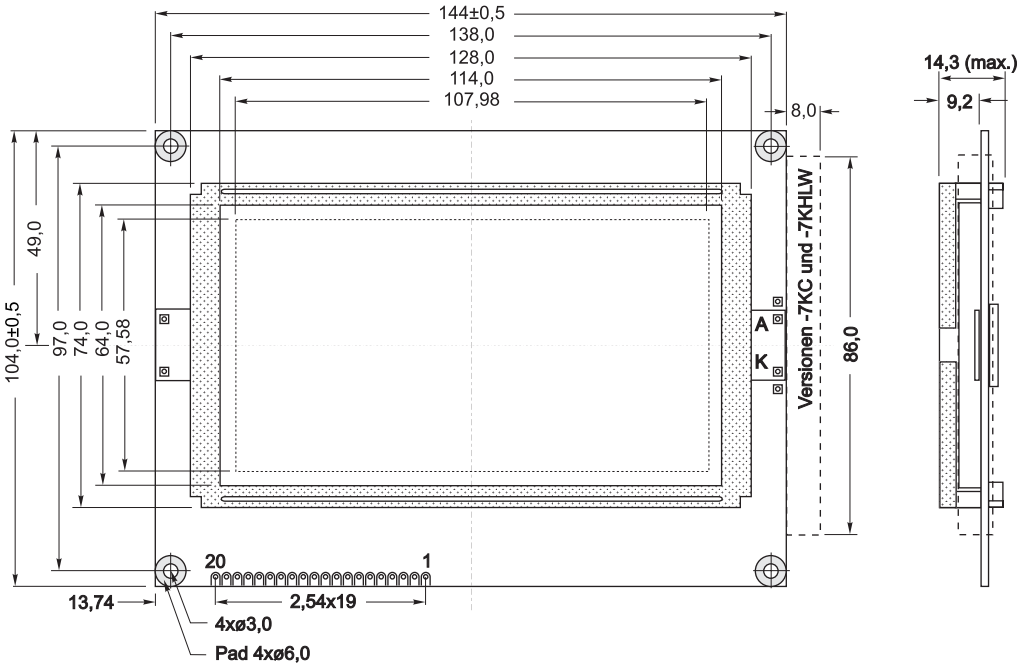

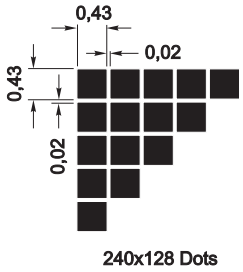

all dimensions are in mm

with Touch Panel

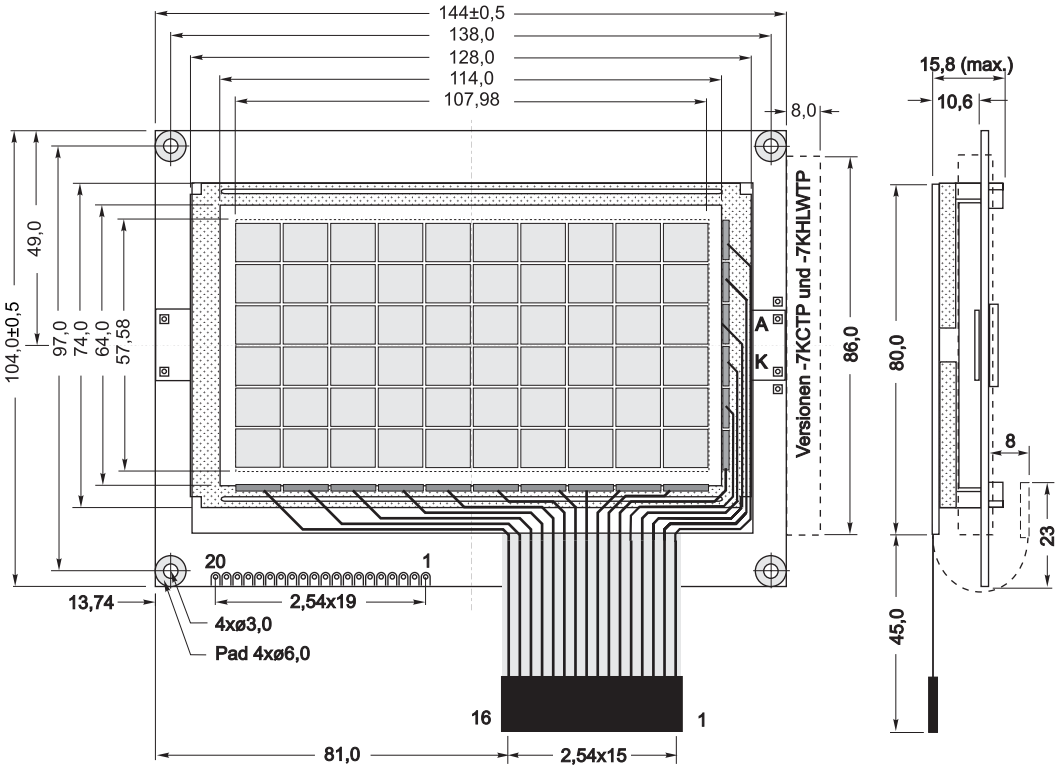

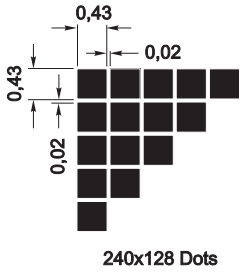

all dimensions are in mm

TOUCH PANEL

Built-in tocuh panel is similar to membrane key switch construction. There are 10x6 matrix areas. Touching a field 1..60 with finger or stick will cause a connection between a column and a row. In example a touch in the area of field #42 will lead to a connection between pin 5 and pin 12. Resistance depends on pressure and may change between 300Ω and 10kΩ. Non operated connection is open. Please note that there is a capacity between each lines and columns (about 100pF). Driver voltage may not exceed+5V.

Beispiel										
Pin	16	15	14	13	12	11	10	9	8	7
1	1	2	3	4	5	6	7	8	9	10
2	11	12	13	14	15	16	17	18	19	20
3	21	22	23	24	25	26	27	28	29	30
4	31	32	33	34	35	36	37	38	39	40
5	41	42	43	44	45	46	47	48	49	50
6	51	52	53	54	55	56	57	58	59	60

Technische Daten				
Spezifikation	min	typ	max	Einheit
On-Widerstand	300		10.000	Ω
Spannung	0,5		5	V
Schaltstrom	10u		10m	A
Betätigungskraft	150		200	g
Kontaktprellen		10		ms
Temperaturbereich	-30		+75	°C
Lebensdauer	1.000.000			Schaltspiele

Zuordnung Feld-Nr zu Pin										
Pin	16	15	14	13	12	11	10	9	8	7
1	1	2	3	4	5	6	7	8	9	10
2	11	12	13	14	15	16	17	18	19	20
3	21	22	23	24	25	26	27	28	29	30
4	31	32	33	34	35	36	37	38	39	40
5	41	42	43	44	45	46	47	48	49	50
6	51	52	53	54	55	56	57	58	59	60

CONTROLLER T6963

On right hand there's a command table of T6963. Detailed informations you can find at our full data sheet *Manual T696C* at http://www.lcd-module.de

Command	Command Code								Description				Remark
	D7	D6	D5	D4	D3	D2	D1	D0					
Pointer Set	0	0	1	0	0	N2	N1	N0	N2	N1	N0		Status Check
									0	0	1	Cursor pointer set	
									0	1	0	Offset register set	
									1	0	0	Adress pointer set	
Control Word Set	0	1	0	0	0	0	N1	N0		N1	N0		Status Check
										0	0	Text home address set	
										0	1	Text area set	
										1	0	Graphic home adress set	
										1	1	Graphic area set	
Mode Set	1	0	0	0	CG	N2	N1	N0	N2	N1	N0	Graphic and Text; CG=0: ROM, CG=1: RAM	
									0	0	0	OR	
									0	0	1	EXOR	
									0	1	1	AND	
									1	0	0	Text only (attribuite capability)	
Display Mode	1	0	0	1	N3	N2	N1	N0				N3=0: Graphic display off N3=1: Graphic display on N2=0: Text display off N2=1: Text display on N1=0: Cursor display off N1=1: Cursor display on N0=0: Cursor blink off N0=1: Cursor blink on	
Cursor Pattern Select	1	0	1	0	0	N2	N1	N0	N2	N1	N0	specifies the number of cursor lines	
									0	0	0	1 line cursor (bottom line)	
									1	1	1	8 line cursor (8x8 dot cursor)	
Data Auto Read/Write	1	0	1	1	0	0	N1	N0		N1	N0	Continous data can be written or read	
										0	0	Data auto write set	
										0	1	Data auto read set	
										1	*	Auto reset	
Data Read/Write	1	1	0	0	0	N2	N1	N0				Data read/write command for 1 byte N2=0: Address pointer up/down N2=1: Address pointer unchanged N1=0: Address pointer up N1=1: Address pointer down N0=0: Data write N0=1: Data read	
Screen Peeking	1	1	1	0	0	0	0	0				Transfer display data to data stack for read from CPU	Status Check
Screen Copy	1	1	1	0	1	0	0	0				1 line display data which address is indicated by address pointer is copied to graphic RAM area	Status Check
Bit Set/Reset	1	1	1	1	N3	N2	N1	N0				N3=0: Bit reset N3=1: Bit set N2, N1, N0 indicates the bit in the pointed address (000 is LSB)	Status Check

Command set T6963C