NUMBER C-181271

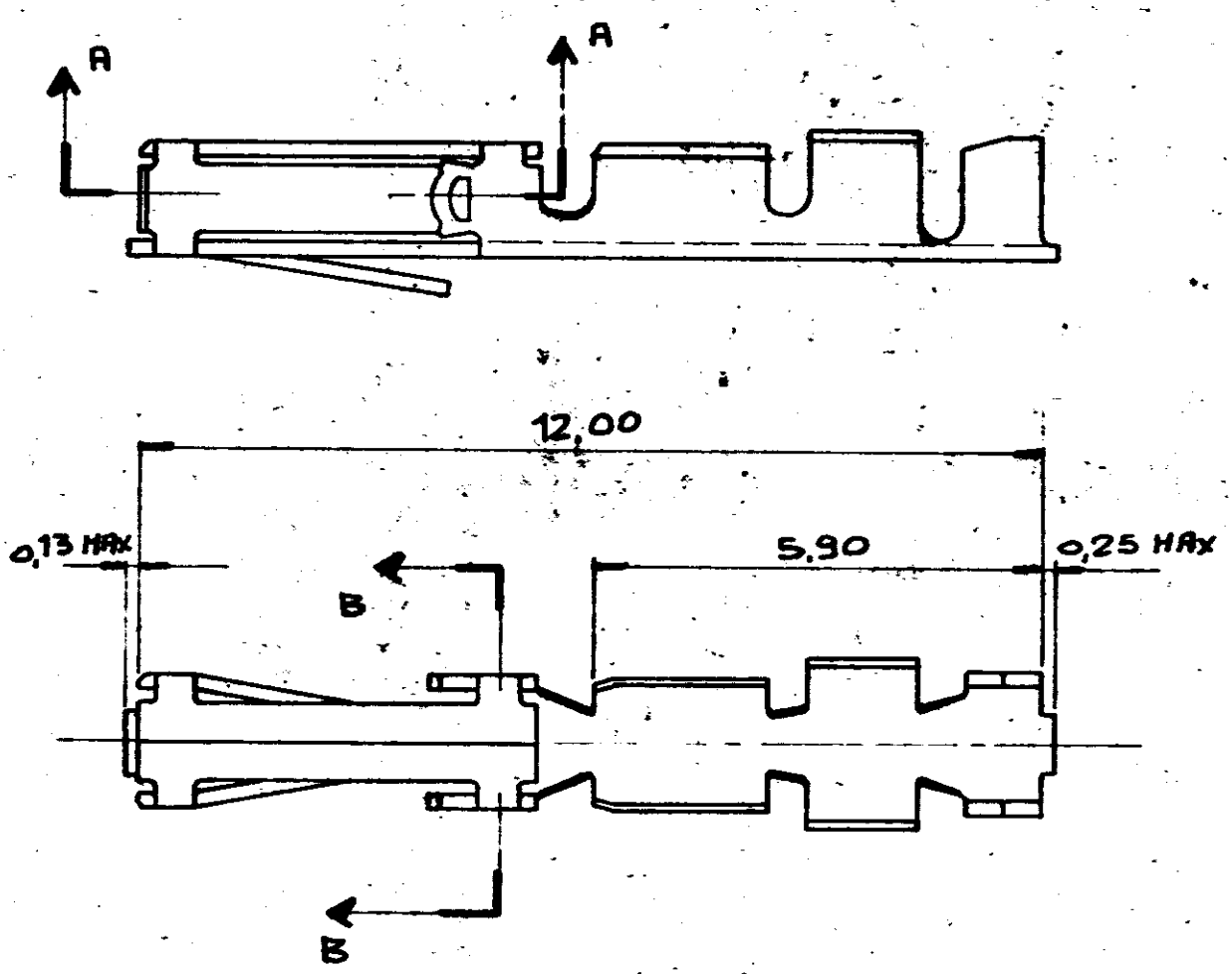

SEZIONE - AA -

SEZIONE - BB -

- P/N 181271-2 DORATURA AREA DI CONTATTO Sp. 0,37 μ, FLASH NELLE ZONE RESTANTI
- P/N 181271-1 DORATURA AREA DI CONTATTO Sp. 0,37 μ

LTR	REVISION RECORD	DR	CHK	DATE
A	REVISIONATO			10-4-75

© 1973 BY AMP INCORPORATED. ALL RIGHTS RESERVED. AMP PRODUCTS COVERED BY PATENTS AND OR PATENTS PENDING.

CUSTOMER COPY REFERENCE ONLY

MATERIAL AND FINISH: BRONZO - FOSFOROSO DORATO

AMP ITALIA VIA CERVI 15 COLLEGNO (TORINO)

CLASS: N

WIRE RANGE: 28 ÷ 30 AWG | INSULATION: 0,63 ÷ 1,27

TYPE: N

TOLERANCE EXCEPT AS NOTED: ±0,20 1:0

SCALE: 10:1

LOC: I | A

NO: C - 181271

REV: A

NAME: L.P. CONTACT REC. CRIMP_ON SNAP_IN

DR: Fiorentino 17-4-75

DE: Squiniff 18-4-75

CHK: 17-4-75

APP: 18-4-75

DIMENSIONS IN mm/in DO NOT SCALE PRINT

PRINT SIZE

AMP 1162