mikromedia for PIC24® - pinout

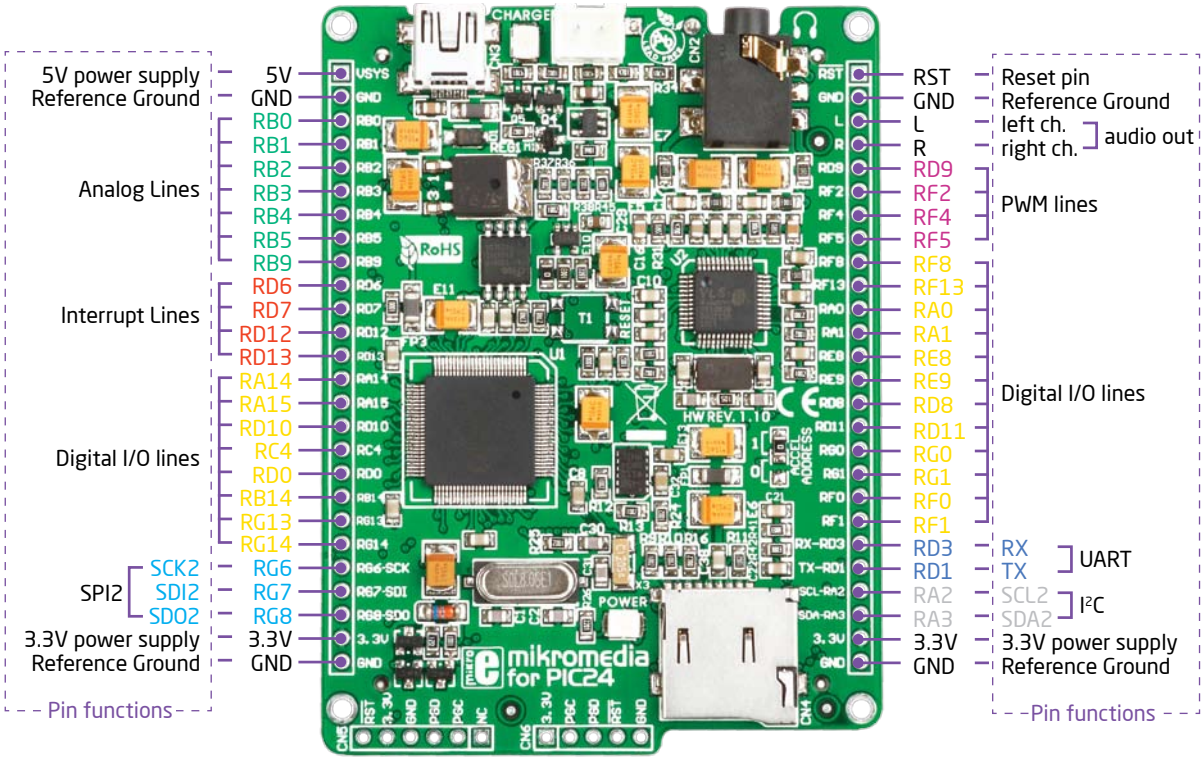

mikromedia for PIC24® - Board dimensions

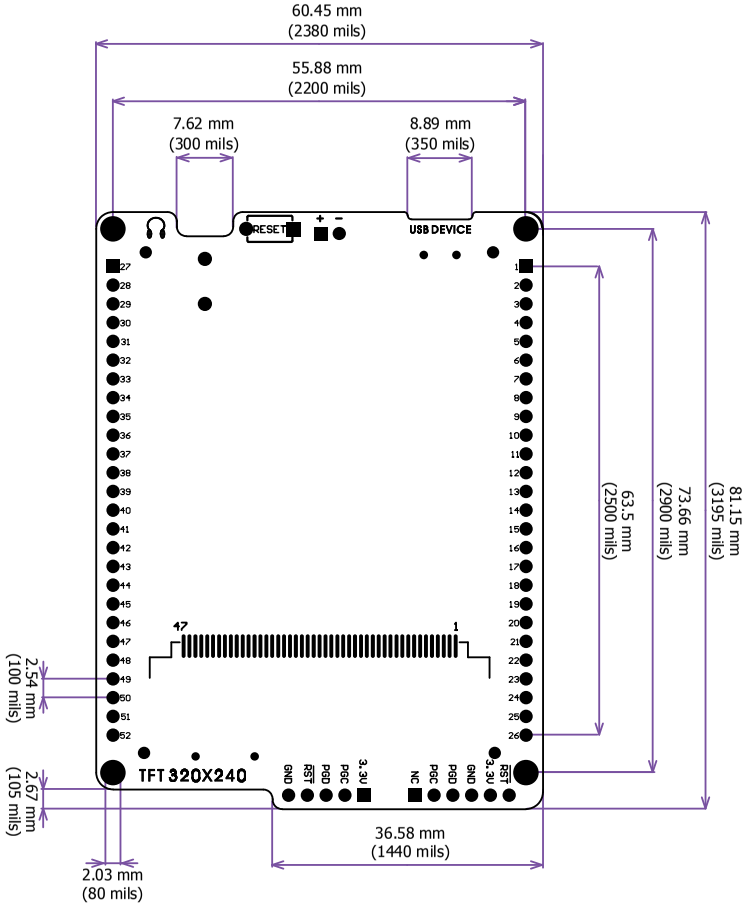

mikromedia for PIC24® Pinout
ver. 1.10

0 100000 020005

MikroElektronika
DEVELOPMENT TOOLS | COMPILERS | BOOKS