MEDER electronic
Products for tomorrow...
Europa: +49 / 7731 8399 0 | Email: info@meder.com
USA: +1 / 508 539 0002 | Email: salesusa@meder.com
Asia: +852 / 2955 1682 | Email: salesasia@meder.com

Part number: 2280752339
Type: MK08-1B75-BV339

Dimensions (mm)

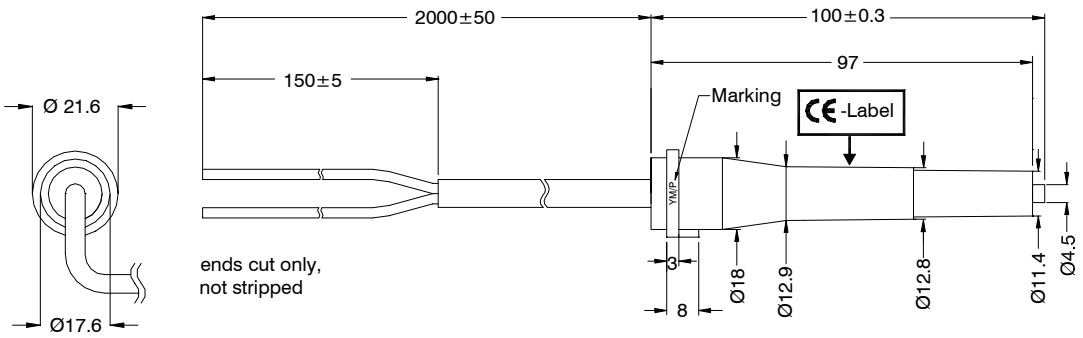

Label

MEDER electronic AG
78224 Singen
Germany
MK08-1B75-BV339
max. 400VDC
max. 10 VA
CE 0344
Ex II 2 GD
Ex mb II T6
Ex tD A21 IP65 T85°C
KEMA 00ATEX 1112X
IECEx KEM09.0006X

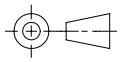

Marking: Production code EN 60062/ Factory code

Magnetic Characteristics	Conditions at 20°C	Min.	Typ.	Max.	Units
Pull-In Switch modified	Testcoil KMS-18	25		50	AT

Contact Data 85 (A/Dry)					
Contact Rating	Any combination of the switching voltage and current must not exceed the given rated power			10	W
Switching Voltage	DC or Peak AC			400	V
Switching Current	DC or Peak AC			0,5	A
Carry Current	DC or Peak AC			1,0	A
Static Contact Resistance (initial)	Measured with 40% overdrive			150	mΩ
Insulation Resistance	RH 45%	10^{10}			Ω
Breakdown Voltage		400			VDC
Operate Time, including Bounce	Measured with 40% overdrive			05	ms
Release Time				0,1	ms
Capacitance			0,4		pF

Environmental Data					
Shock	½ sine wave, duration 11ms			50	g
Vibration	from 10 - 2000 Hz			35	g
Operating Temperature	10°C/min max. allowable	-40		60	°C
Storage Temperature	10°C/min max. allowable	-40		60	°C
Soldering Temperature	5 sec. at			260	°C
Cleaning		fully sealed			
Material of Case	**Makrolon 2805** grey, Bayer AG, D-51368 Leverkusen; Polycarbonat				
Sealing Compound	**Silikon RTV 627**, INDEG GmbH, Emil-Kömmerling-Straße 5, D-66954 Pirmasens Colour: dark grey; useful temperature range: –60 to 204°C Mixing: RTV627A base component and RTV627B curing agent, in 1:1 ratio by weight or vol. Operate temperature: 21°C				
Sealing Compound	**Polyurethan PU 570**, WEVO-Chemie GmbH, Mergenthaler Straße 13, D-73760 Ostfildern- Kemnat Colour: dark grey; useful temperature range: -40 to 130°C Quota of the filling substances: 100 parts of vol. PU 570, 26 parts of vol. Harder 300 Operate temperature: 21°C				
Cable	Oil resistent round cable H05RN-F 2 x 0,75mm^2, black colour of wire: blue and brown ends cut only, not stripped				
Contact Resistance with Cable	Measured with 40% overdrive			320	mΩ

Customer / Customer part number	**Gilbarco**