Data sheet | Item number: 773-118

PUSH WIRE® connector for junction boxes; for solid and stranded conductors; max. 2.5 mm²; 8-conductor; transparent housing; green cover; Surrounding air temperature: max 60°C; 2,50 mm²; multicoloured

www.wago.com/773-118

RoHS ✓ Compliant

BOMcheck.net

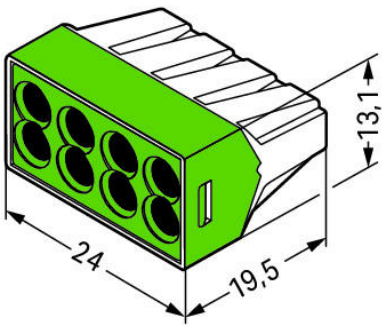

Item description

Note:
Terminating Aluminum Conductors
WAGO spring clamp terminal blocks are suitable for solid aluminum conductors up to 4 mm²/12 AWG if WAGO “Alu-Plus” Contact Paste is used for termination.

“Alu-Plus” Contact Paste Advantages:

- Automatically destroys the oxide film during clamping.
- Prevents fresh oxidation at the clamping point.
- Prevents electrolytic corrosion between aluminum and copper conductors (in the same terminal block).
- Provides long-term protection against corrosion.

For spring clamp connections with PUSH WIRE® connection technology, **WAGO recommends that the aluminum conductor first be cleaned** and then immediately inserted into the clamping unit filled with “Alu-Plus” contact paste.

It is also possible to apply WAGO “Alu-Plus” **additionally** on the whole surface of the aluminum conductor before termination.

Please note that the nominal currents must be adapted to the reduced conductivity of the aluminum conductors::
2.5 mm² = 16 A

Subject to changes. Please also observe the further product documentation!

WAGO Kontakttechnik GmbH & Co. KG
Hansastr. 27
32423 Minden
Phone: +49571 887-0 | Fax: +49571 887-169
Email: info.de@wago.com | Web: www.wago.com

Do you have any questions about our products?
We are always happy to take your call at +49 (571) 887-44222.

4 mm² = 22 A
Safety information 1:
in grounded power lines

Data
Electrical data

Ratings per IEC/EN

Ratings per	IEC/EN 60664-1
Nominal voltage (II/2)	400 V
Rated surge voltage (II/2)	4 kV
Rated current	24 A
Legend (ratings)	(II / 2) ≙ Overvoltage category II / Pollution degree 2

Connection data

Connection technology	PUSH WIRE®
Actuation type	Push-in
Connectable conductor materials	Copper Aluminum
Solid conductor	0.75 … 2.5 mm² / 18 … 12 AWG
Stranded conductor	1.5 … 2.5 mm² / 16 … 12 AWG
Strip length	12 mm / 0.47 inch
Total number of connection points	8
Total number of potentials	1
Wiring type	Side-entry wiring

Physical data

Width	24 mm / 0.945 inch
Height	13.1 mm / 0.516 inch
Depth	19.5 mm / 0.768 inch

Material data

Color	multicoloured
Cover color	green
Flammability class per UL94	V2
Weight	4.6 g

Subject to changes. Please also observe the further product documentation!

WAGO Kontakttechnik GmbH & Co. KG
Hansastr. 27
32423 Minden
Phone: +49571 887-0 | Fax: +49571 887-169
Email: info.de@wago.com | Web: www.wago.com

Do you have any questions about our products?
We are always happy to take your call at +49 (571) 887-44222.

Environmental requirements

Surrounding air temperature (operation)	60 °C

Commercial data

Packaging type	BOX
Country of origin	CN
GTIN	4055143237567
Customs tariff number	85369010000

Approvals / Certificates

Country specific Approvals

Logo	Approval	Additional Approval Text	Certificate name
	CCA UL International Demko A/S	EN 60998	CCA-DK No. 2520
	CSA DEKRA Certification B.V.	C22.2	15411 (LR46759)
	KEMA/KEUR DEKRA Certification B.V.	EN 60998	71-101747

Ship Approvals

Logo	Approval	Additional Approval Text	Certificate name
	ABS American Bureau of Shipping	-	18-HG1755093-PDA
	BV Bureau Veritas S.A.	EN 60998	11914/D0 BV
	DNV GL Det Norske Veritas, Germanischer Lloyd	EN 60998	TAE000015T

Subject to changes. Please also observe the further product documentation!

WAGO Kontakttechnik GmbH & Co. KG
Hansastr. 27
32423 Minden
Phone: +49571 887-0 | Fax: +49571 887-169
Email: info.de@wago.com | Web: www.wago.com

Do you have any questions about our products?
We are always happy to take your call at +49 (571) 887-44222.

	LR Lloyds Register	EN 60998	04/20013 (E8)

UL-Approvals

Logo	Approval	Additional Approval Text	Certificate name
	UL UL International Germany GmbH	UL 467	E201573
	UL UL International Germany GmbH	EN 60998	D-03479-A1

Compatible products

General accessories

	Item no.: 249-130 Syringe; Contents: 20 ml Alu-Plus contact paste	www.wago.com/249-130

Mounting adapter

	Item no.: 773-332 Mounting carrier; 773 Series - 2.5 mm² / 4 mm² / 6 mm²; for DIN-35 rail mounting/screw mounting; orange	www.wago.com/773-332

Downloads

Documentation

Additional Information

Technical explanations	3. 4. 2019	pdf 2.2 MB	Download

CAD/CAE-Data

CAE data

EPLAN Data Portal 773-118	URL	Download
WSCAD Universe 773-118	URL	Download

Subject to changes. Please also observe the further product documentation!

WAGO Kontakttechnik GmbH & Co. KG
Hansastr. 27
32423 Minden
Phone: +49571 887-0 | Fax: +49571 887-169
Email: info.de@wago.com | Web: www.wago.com

Do you have any questions about our products?
We are always happy to take your call at +49 (571) 887-44222.

Environmental Product Compliance

Compliance Search

Environmental Product Compliance 773-118 PUSH WIRE® connector for junction boxes; for solid and stranded conductors; max. 2.5 mm²; 8-conductor; transparent housing; green cover; Surrounding air temperature: max 60°C; 2,50 mm²; multicoloured	URL	Download

Installation Notes

WAGO Kontakttechnik GmbH & Co. KG
Hansastr. 27
32423 Minden
Phone: +49571 887-0 | Fax: +49571 887-169
Email: info.de@wago.com | Web: www.wago.com

Do you have any questions about our products?
We are always happy to take your call at +49 (571) 887-44222.