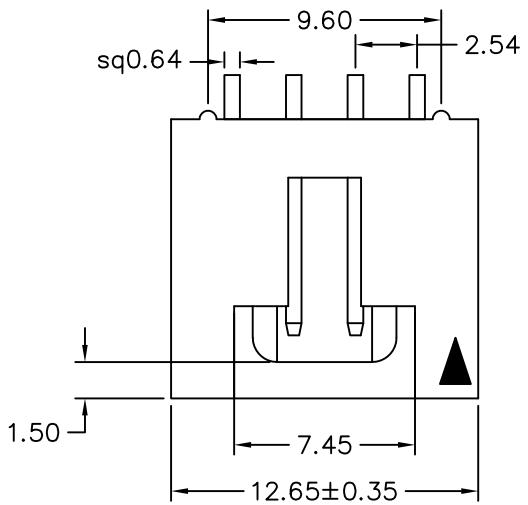

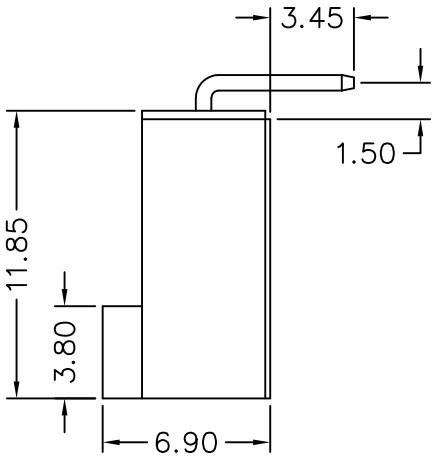

MATERIAL

Insulator : NY66+30% G.F UL94-V0
Contact Pin : Brass

SPECIFICATION

Current Rate : 3 AMP
Insulation Resistance : 1000MΩMin. at DC 500V
Contact Resistance : 30mΩMax. at DC 100mA
Dielectric Voltage : 500V AC for one minute
Operation Temperature : -40°C to +105°C

209-8 1- 04 T B 2 0
1 2 3 4 5 6 7

1. 8: Green Product
2. 0: 180°
   1: 90°
3. No. of contacts per row
4. G: Gold flash
   T: Tin plated
5. B: Black Insulator
   W: Nature color Insulator
   Y: Yellow Insulator
6. 2: W/O post & W/O stand off
7. Pinrex internal code.

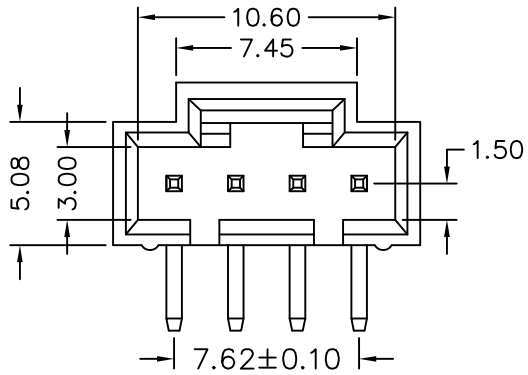

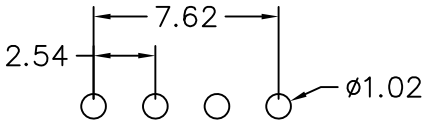

Recommended P.C.B Layout

			TOLERANCE		OLD PART NO.			TITLE CD ROM 2.54*2.54mm RIGHT ANGLE TYPE W/O STAND OFF, W/O POST		頻銳科技股份有限公司 PINREX TECHNOLOGY CORP.
			.0 =±.30	UNITS : mm	DRAWER 罗黄黄		CHECK 李剑			
			.00 =±.20							
			.000 =±.XXX							
A	RELEASE	2023/08/01	.0000=±.	SCALE NONE	SIZE A4	SHEET 1 OF 1	REV. A	APP'D 李剑	NEW PART NO. 209-81-04TB20	DRAW NO. 209-81-04TB20
REV.	DESCRIPTION	DATE	ANG.=±3°							