SERIES 1 | 480 VAC

PANEL MOUNT

Features

- Ratings from 25A to 90A @ 48-530 VAC
- SCR output for heavy industrial loads
- Zero voltage or instantaneous turn-on outputs
- UL/CSA/TUV Approved, CE Compliant to EN60950-1
- Improved SEMS screw and washer
- Redesigned housing with anti-rotation barriers
- AC or DC control
- Direct bond copper substrate
- EMC compliant to Level 3
- Direct power lead frame
- Epoxy free design

PRODUCT SELECTION

Control Voltage	25 A	50 A	75 A	90 A
4-32 VDC	D4825	D4850	D4875	D4890
90-280 VAC	A4825	A4850	A4875	A4890

ORDERING OPTIONS

A – 48 – 25 – K – S – H – -10

Control Voltage

A: 90-280 VAC
D: 4-32 VDC

Operating Voltage

48: 48-530 VAC

Rated Load Current

25: 25 Amps
50: 50 Amps
75: 75 Amps
90: 90 Amps

Termination

Blank: Screw
F: Quick Connect (Up to 50 Amps only) (1)
K: Hex standoffs (2)

Snubber

Blank: Not Included
S: Included

Thermal Pad

Blank: Not Included
H: Included

Switching Type

Blank: Zero Voltage Turn-On
-10: Instantaneous Turn-On (3)

— Required for valid part number
☐ For options only and not required for valid part number

Note: Not all part number combinations are available. Contact Crydom Technical support for information on the availability of a specific part number.

Copyright © 2021 Sensata Technologies, Inc.

OUTPUT SPECIFICATIONS (4)

Description	25 A	50 A	75 A	90 A
Operating Voltage (47-440Hz) [Vrms] (5)	48-530	48-530	48-530	48-530
Transient Overvoltage [Vpk]	800	800	800	800
Maximum Off-State Leakage Current @ Rated Voltage [mArms] (6)	1	1	1	1
Minimum Off-State dv/dt @ Maximum Rated Voltage [V/µsec]	500	500	500	500
Maximum Load Current [Arms] (2)(7)	25	50	75	90
Minimum Load Current [mArms]	150	150	150	150
Maximum 1 Cycle Surge Current (50/60Hz) [Apk]	239/250	597/625	954/1000	1145/1200
Maximum On-State Voltage Drop @ Rated Current [Vrms]	1.15	1.15	1.15	1.15
Thermal Resistance Junction to Case (Rjc) [°C/W]	0.8	0.45	0.3	0.27
Maximum 1/2 Cycle I^2t for Fusing (50/60Hz) [A^2 sec]	285/259	1770/1621	4555/4150	6560/5976
Minimum Power Factor (at Maximum Load)	0.5	0.5	0.5	0.5

INPUT SPECIFICATIONS (4)

Description	D48xx	A48xx
Control Voltage Range	4-32 VDC	90-280 Vrms
Maximum Reverse Voltage	-32 VDC	-
Minimum Turn-On Voltage	4.0 VDC (8)	90 Vrms
Must Turn-Off Voltage	1.0 VDC	10 Vrms
Minimum Input Current [mA]	7	5
Maximum Input Current [mA]	12	10
Nominal Input Impedance [Ohms]	Current Regulated	
Maximum Turn-On Time [msec]	1/2 Cycle (9)	20
Maximum Turn-Off Time [msec]	1/2 Cycle	30

GENERAL SPECIFICATIONS (4)

Description	Parameters
Dielectric Strength, Input/Output/Base (50/60Hz)	4000 Vrms
Minimum Insulation Resistance (@ 500 VDC)	10^9 Ohm
Maximum Capacitance, Input/Output	8 pF
Ambient Operating Temperature Range	-40 to 80 °C
Ambient Storage Temperature Range	-40 to 125 °C
Weight (typical)	2.6 oz (74.9g)
Housing Material	UL 94 V-0
Baseplate Material	Aluminum
Input Terminal Screw Torque Range (in-lb/Nm)	13-15 /1.5-1.7
Load Terminal Screw Torque Range (in-lb/Nm)	18-20 / 2.0-2.2
SSR Mounting Screw Torque Range (in-lb/Nm)	18-20 / 2.0-2.2
Input/Load Terminal Screw Torque Range (in-lb/Nm) (2)	w/"K" option 8-10 / 0.9-1.13
Input/Output Terminal Screw Thread Size	#6-32 UNC / #8-32 UNC
Humidity per IEC60068-2-78	93% non-condensing
LED Input Status Indicator	w/"G" option (green)
MTBF (Mean Time Between Failures) at 40°C ambient temperature (10)	11,641,553 hours (1,328 years)
MTBF (Mean Time Between Failures) at 60°C ambient temperature (10)	7,210,376 hours (823 years)

WIRING DIAGRAM

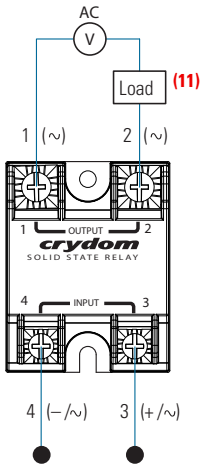

Recommended Wire Sizes		
Terminals	Wire Size (Solid / Stranded)	Wire Pull-Out Strength (lb)[N]
Input	24 AWG (0.2 mm²) / 0.2 [minimum]	10 [44.5]
	2 x 12 AWG (3.3 mm²) / 3.3 [maximum]	90 [400]
Output	20 AWG (0.5 mm²) / 0.518 [minimum]	30 [133]
	2 x 10 AWG (5.3 mm²) / 5.3	110 [490]
	2 x 8 AWG (8.4 mm²) / 8.4 [maximum]	90 [400]

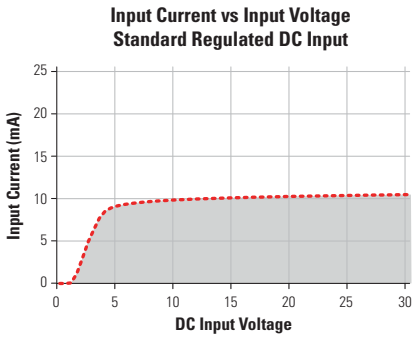

Copyright © 2021 Sensata Technologies, Inc.

EQUIVALENT CIRCUIT BLOCK DIAGRAMS

Diagram: Series 1 AC

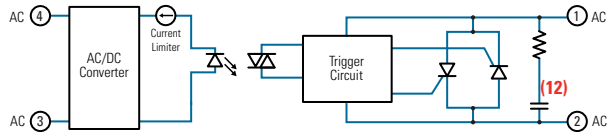

Diagram: Series 1 DC

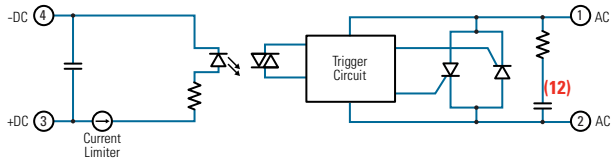

MECHANICAL SPECIFICATIONS (4)

Tolerances: ±0.02 in / 0.5 mm
All dimensions are in: inches [millimeters]

Screw Termination

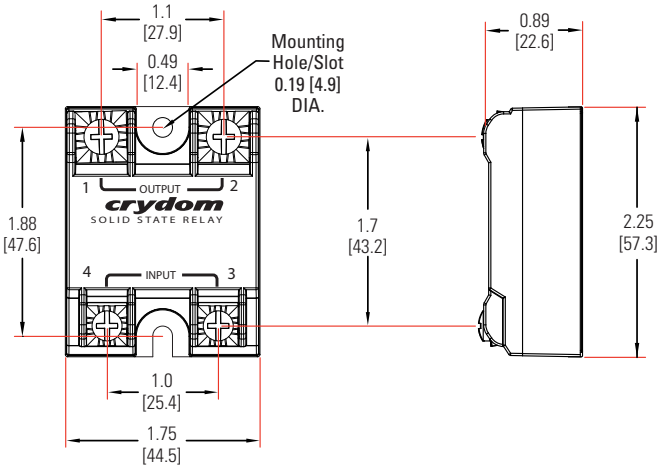

Hex Standoff Termination ("K" Option) (2)

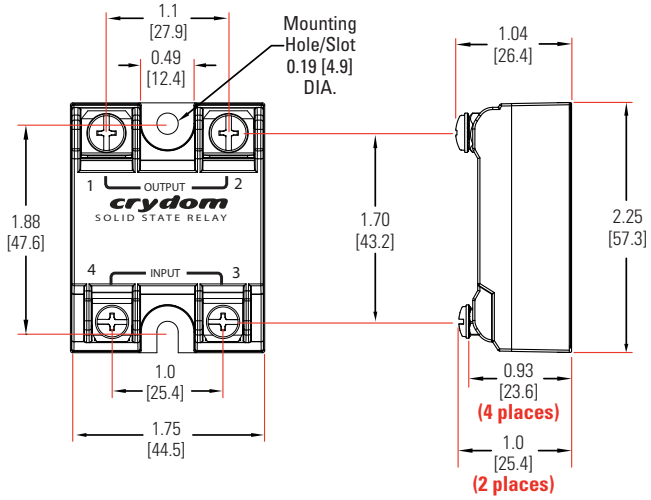

Quick Connect Termination ("F" Option) - Up to 25 Amp (1)

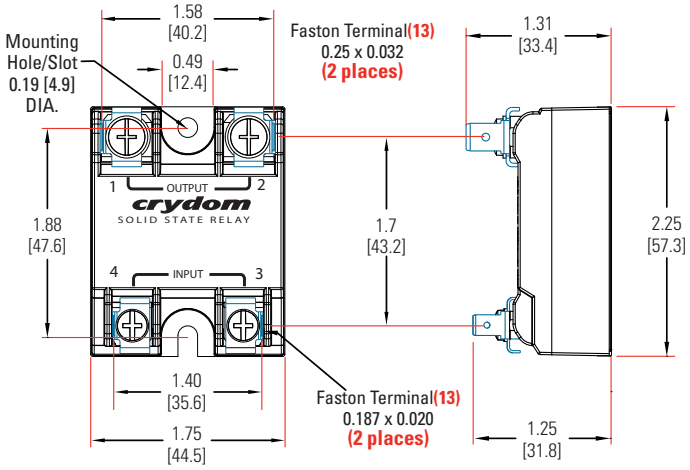

Quick Connect Termination ("F" Option) - Up to 50 Amp (1)

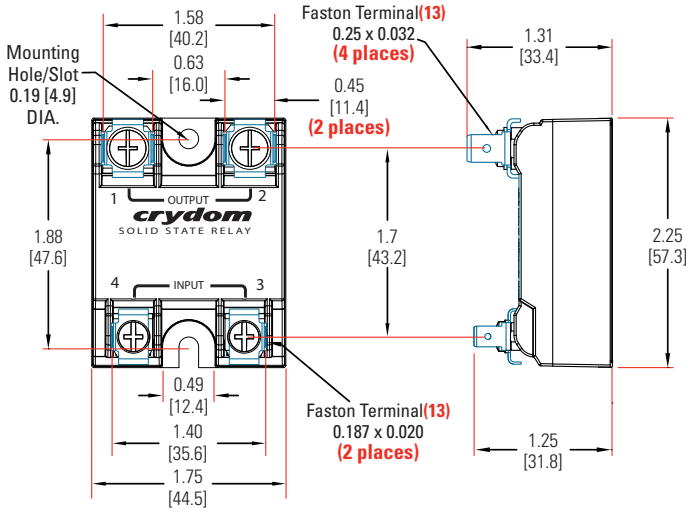

Copyright © 2021 Sensata Technologies, Inc.

SURGE CURRENT INFORMATION

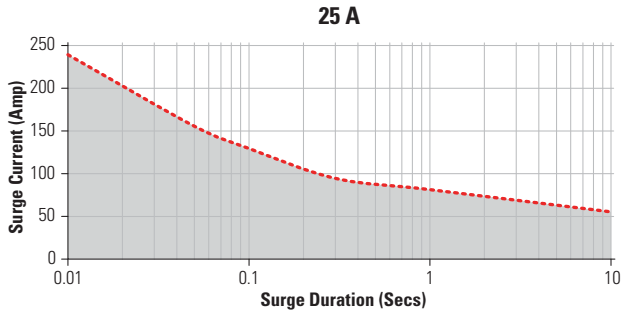

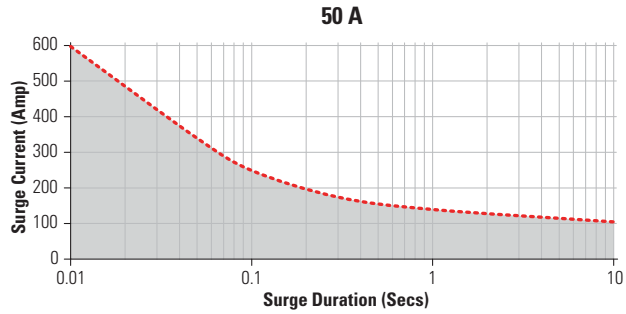

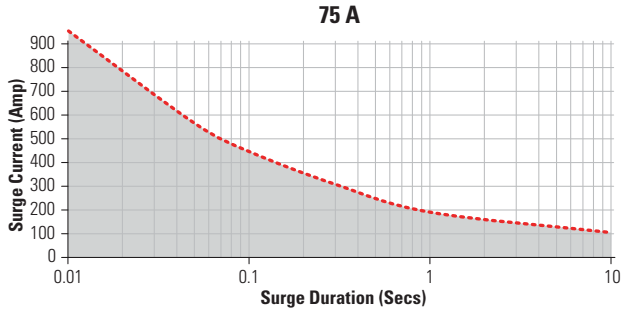

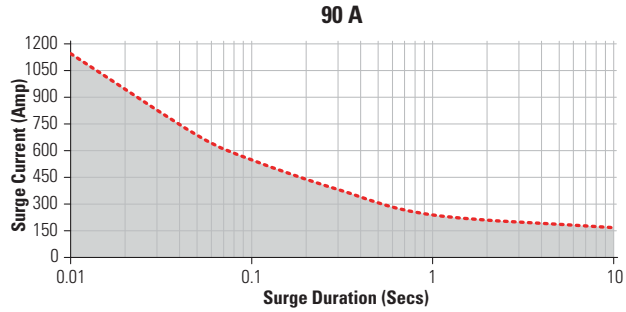

Non repetitive peak surge current at Tj initial 40ºC.

THERMAL DERATE INFORMATION

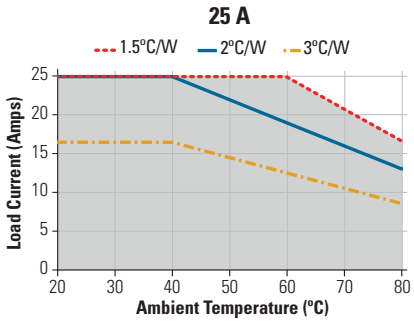

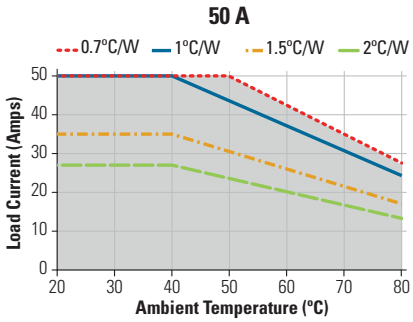

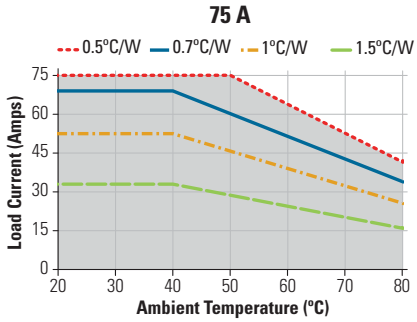

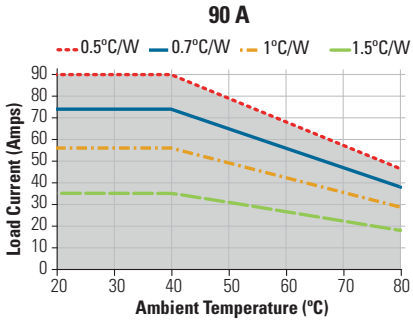

Copyright © 2021 Sensata Technologies, Inc.

AGENCY APPROVALS AND CERTIFICATIONS

EN60950 : Meets the requirements of sections1.5: 1,7: 2.9: 2.10.5.3: 4.2: 4.5: 4.7:
Designed in accordance with the requirements of IEC 62314
IEC 61000-4-2 : Electrostatic Discharge – Level 3
IEC 61000-4-4 : Electrically Fast Transients – Level 3
IEC 61000-4-5 : Electrical Surges – Level 3
IEC 60068-2-6 : Vibration 0.33mm and 0.75 mm Amplitude over 10-55 Hz
IEC 60068-2-27 : Shock Resistance 15g/11ms

c US E116949 LR81689 RoHS

ACCESORIES

New Accessories!
Protective Cover & Hardware Kits

Protective Cover
Part number: KS101

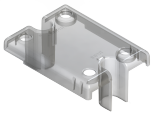

Clear plastic cover compatible with all new S1 designs. Safety covers provide added protection from electric shock when installing or checking equipment.

Hardware Kit
Part number: HK4

Bag with 2 square brass accessories and 2 screw 8-32 x 5/8 for output. Used to mount TMR1 lug terminals.

Recommended Accessories

Cover	Hardware Kit	Heat Sink Part No.	Thermal Resistance [°C/W]	Lug Terminal	Thermal Pad
KS101	HK1	HS501DR	5.0	TRM1	HSP-1
	HK4	HS301 / HS301DR	3.0	TRM6	HSP-2
		HS251	2.5		
		HS202 / HS202DR	2.0		
		HS201 / HS201DR	2.0		
		HS172	1.7		
		HS151 / HS151DR	1.5		
		HS122 / HS122DR	1.2		
		HS103 / HS103DR	1.0		
		HS101	1.0		
		HS073	0.7		
		HS072	0.7		
		HS053	0.5		
		HS033	0.36		
		HS023	0.25		

GENERAL NOTES

(1) Single pair (up to 25 A) Double pair* (50 A model only). ***Caution:** User must connect to both pairs.
(2) Option "K" is designed and tested for use with printed circuit boards or ring/fork terminals having a thickness between 0.031 and 0.093 inches (0.79 to 2.36 mm), and loads rated up to 50 Amps. For higher load currents, the "K" standoff temperature must not exceed 105°C. For additional application assistance please contact Crydom Technical Support.
(3) Instantaneous turn-on not recomended for capacitive loads. Use zero turn-on only.
(4) All parameters at 25°C unless otherwise specified.
(5) For "S" option, operating voltage frequency is 47-63Hz.
(6) For parts with option "S" maximum leakage current is 10mA.
(7) Heat sinking required, see derating curves.
(8) Increase minimum voltage by 1V for operations from -20 to -40°C.
(9) Turn-on time for instantaneous turn-on versions is 0.02 msec (DC control Models).
(10) All parameters at 50% power rating and 100% duty cycle (contact Crydom tech support for detailed report).
(11) Load can be wired to either SSR output terminal 1 or 2.
(12) Elective Internal Snubber, "S" option.
(13) Mechanical dimensions vary from G3 models.

For additional information or specific questions, contact Crydom Technical Support.

Copyright © 2021 Sensata Technologies, Inc.

WARNINGS

RISK OF MATERIAL DAMAGE AND HOT ENCLOSURE

- The product's side panels may be hot, allow the product to cool before touching.
- Follow proper mounting instructions including torque values.
- Do not allow liquids or foreign objects to enter this product.

Failure to follow these instructions can result in serious injury, or equipment damage.

HAZARD OF ELECTRIC SHOCK, EXPLOSION OR ARC FLASH

- Disconnect all power before installing or working with this equipment.
- Verify all connections and replace all covers before turning on power.

Failure to follow these instructions will result in death or serious injury.

Sensata Technologies, Inc. ("Sensata") data sheets are solely intended to assist designers ("Buyers") who are developing systems that incorporate Sensata products (also referred to herein as "components"). Buyer understands and agrees that Buyer remains responsible for using its independent analysis, evaluation and judgment in designing Buyer's systems and products. Sensata data sheets have been created using standard laboratory conditions and engineering practices. Sensata has not conducted any testing other than that specifically described in the published documentation for a particular data sheet. Sensata may make corrections, enhancements, improvements and other changes to its data sheets or components without notice.
Buyers are authorized to use Sensata data sheets with the Sensata component(s) identified in each particular data sheet. HOWEVER, NO OTHER LICENSE, EXPRESS OR IMPLIED, BY ESTOPPEL OR OTHERWISE TO ANY OTHER SENSATA INTELLECTUAL PROPERTY RIGHT, AND NO LICENSE TO ANY THIRD PARTY TECHNOLOGY OR INTELLECTUAL PROPERTY RIGHT, IS GRANTED HEREIN. SENSATA DATA SHEETS ARE PROVIDED "AS IS". SENSATA MAKES NO WARRANTIES OR REPRESENTATIONS WITH REGARD TO THE DATA SHEETS OR USE OF THE DATA SHEETS, EXPRESS, IMPLIED OR STATUTORY, INCLUDING ACCURACY OR COMPLETENESS. SENSATA DISCLAIMS ANY WARRANTY OF TITLE AND ANY IMPLIED WARRANTIES OF MERCHANTABILITY, FITNESS FOR A PARTICULAR PURPOSE, QUIET ENJOYMENT, QUIET POSSESSION, AND NON-INFRINGEMENT OF ANY THIRD PARTY INTELLECTUAL PROPERTY RIGHTS WITH REGARD TO SENSATA DATA SHEETS OR USE THEREOF.
All products are sold subject to Sensata's terms and conditions of sale supplied at www.sensata.com SENSATA ASSUMES NO LIABILITY FOR APPLICATIONS ASSISTANCE OR THE DESIGN OF BUYERS' PRODUCTS. BUYER ACKNOWLEDGES AND AGREES THAT IT IS SOLELY RESPONSIBLE FOR COMPLIANCE WITH ALL LEGAL, REGULATORY AND SAFETY-RELATED REQUIREMENTS CONCERNING ITS PRODUCTS, AND ANY USE OF SENSATA COMPONENTS IN ITS APPLICATIONS, NOTWITHSTANDING ANY APPLICATIONS-RELATED INFORMATION OR SUPPORT THAT MAY BE PROVIDED BY SENSATA.
Mailing Address: Sensata Technologies, Inc., 529 Pleasant Street, Attleboro, MA 02703, USA.

CONTACT US

Americas
+1 (877) 502 5500 – Option 2
sales.crydom@sensata.com
Europe, Middle East & Africa
+44 (1202) 416170
ssr-info.eu@sensata.com
Asia Pacific
sales.isasia@list.sensata.com
China +86 (21) 2306 1500
Japan +81 (45) 277 7117
Korea +82 (31) 601 2004
India +91 (80) 67920890
Rest of Asia +886 (2) 27602006 ext 2808

Copyright © 2021 Sensata Technologies, Inc.

Rev. 04/01/21 ECN 21039 FDE-07-01 Rev. B