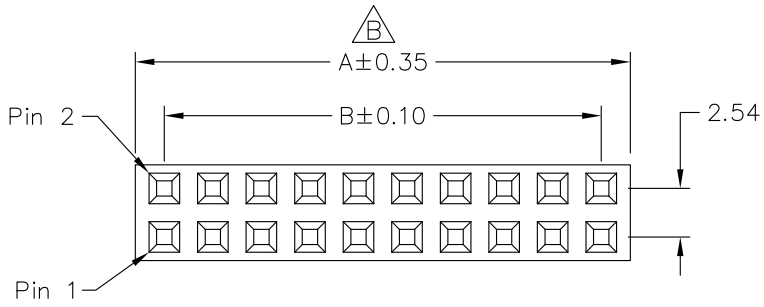

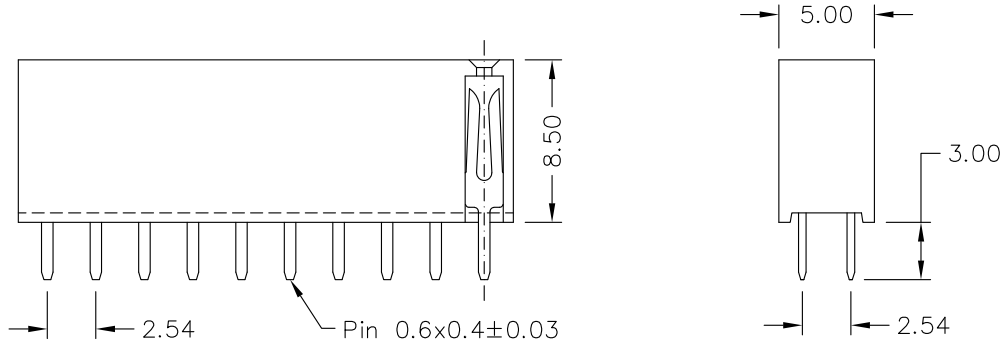

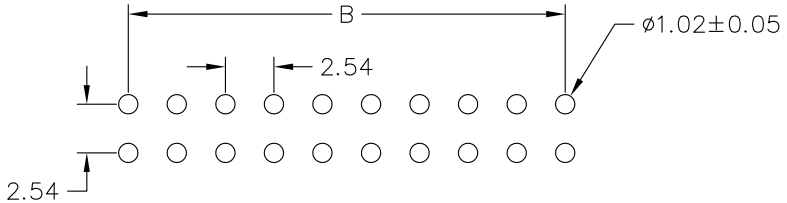

Recommended P.C.B Layout

MATERIAL

Insulator : NY6T UL94-V0
Contact Pin : Brass

SPECIFICATION

Current Rate : 3 AMP
Insulation Resistance : 5000MΩMin.
Contact Resistance : 20mΩMax.
Dielectric Voltage : AC 500V for one minute
Operation Temperature : -40°C to + 105°C

610-9 2- xx G B 00
1 2 3 4 5

1. 1: Single row
   2: Dual rows
2. No. of contacts per row
3. G: Gold flash
   T: Tin plated
4. B: Black Insulator
   W: White Insulator
5. Pinrex internal code.

文管中心
2023.01.12
发行章

POLES	DIM A	DIM B	POLES	DIM A	DIM B
			21	53.84	50.80
2	5.58	2.54	22	56.38	53.34
3	8.12	5.08	23	58.92	55.88
4	10.66	7.62	24	61.46	58.42
5	13.20	10.16	25	64.00	60.96
6	15.74	12.70	26	66.54	63.50
7	18.28	15.24	27	69.08	66.04
8	20.82	17.78	28	71.62	68.58
9	23.36	20.32	29	74.16	71.12
10	25.90	22.86	30	76.70	73.66
11	28.44	25.40	31	79.24	76.20
12	30.98	27.94	32	81.78	78.74
13	33.52	30.48	33	84.32	81.28
14	36.06	33.02	34	86.86	83.82
15	38.60	35.56	35	89.40	86.36
16	41.14	38.10	36	91.94	88.90
17	43.68	40.64	37	94.48	91.44
18	46.22	43.18	38	97.02	93.98
19	48.76	45.72	39	99.56	96.52
20	51.30	48.26	40	102.1	99.06

REV.	DESCRIPTION	DATE
B	修正總長公差	2023/01/11
A	RELEASE	2004/11/10

TOLERANCE
.0 =±.30
.00 =±.20
.000 =±.XXX
.0000=±.
ANG.=±3°

UNITS : mm

SCALE NONE | SIZE A4

OLD PART NO.

DRAWER 罗茵茵 | CHECK 李劍

SHEET 1 OF 1 | REV. B | APP'D 李劍

TITLE FEMALE HEADER 2.54*2.54mm STRAIGHT TYPE, DUAL ROWS HEIGHT 8.5mm, (GP)

NEW PART NO. 610-92-xxGB00

頻銳科技股份有限公司
PINREX TECHNOLOGY CORP.

DRAW NO. 610-92-xxGB00(B版)